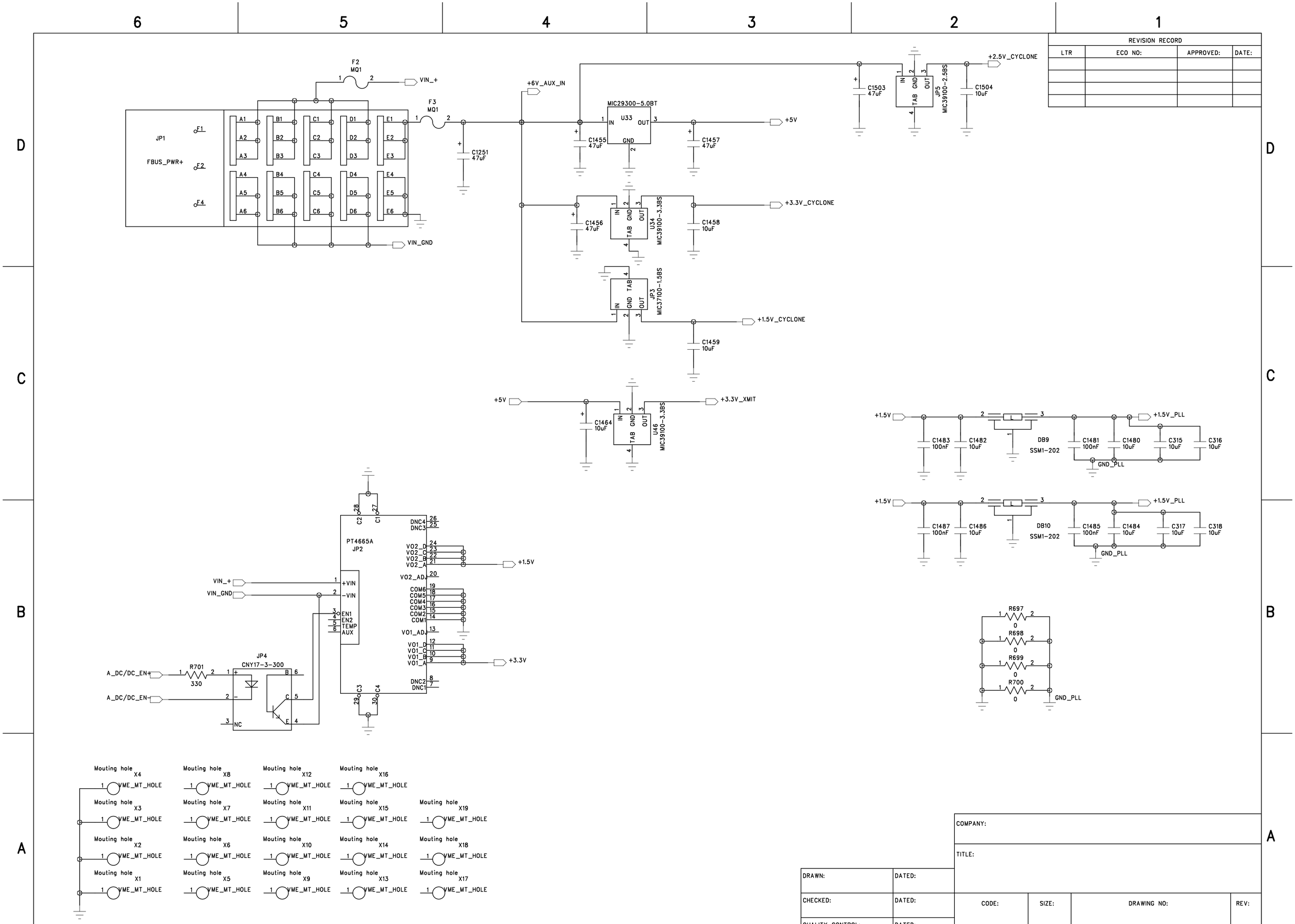
6
5
4
3
2
1
D
C
B
A
REVISION RECORD
LTR
ECO NO:
APPROVED:
DATE:
JP1
FBUS_PWR+
F1
F2
F4
A1 A2 A3 A4 A5 A6
B1 B2 B3 B4 B5 B6
C1 C2 C3 C4 C5 C6
D1 D2 D3 D4 D5 D6
E1 E2 E3 E4 E5 E6
F2
MQ1
F3
MQ1
VIN_+
VIN_GND
C1251
47uF
+6V_AUX_IN
MIC29300-5.0BT
U33
IN
OUT
GND
C1455
47uF
C1457
47uF
+5V
C1503
47uF
JP5
MIC39100-2.5BS
IN
GND
OUT
TAB
C1504
10uF
+2.5V_CYCLONE
C1456
47uF
U34
MIC39100-3.3BS
C1458
10uF
+3.3V_CYCLONE
JP3
MIC37100-1.5BS
C1459
10uF
+1.5V_CYCLONE
+5V
C1464
10uF
U46
MIC39100-3.3BS
+3.3V_XMIT
+1.5V
C1483
100nF
C1482
10uF
DB9
SSM1-202
C1481
100nF
C1480
10uF
C315
10uF
C316
10uF
+1.5V_PLL
GND_PLL
C1487
100nF
C1486
10uF
DB10
SSM1-202
C1485
100nF
C1484
10uF
C317
10uF
C318
10uF
PT4665A
JP2
+VIN
-VIN
EN1
EN2
TEMP
AUX
DNC4
DNC3
VO2_D
VO2_C
VO2_B
VO2_A
VO2_AD
COM6
COM5
COM4
COM3
COM2
COM1
VO1_AD
VO1_D
VO1_C
VO1_B
VO1_A
DNC2
DNC1
+1.5V
+3.3V
C1
C2
C3
C4
JP4
CNY17-3-300
A_DC/DC_EN+
A_DC/DC_EN-
R701
330
NC
R697
0
R698
0
R699
0
R700
0
GND_PLL
Mouting hole X4
Mouting hole X8
Mouting hole X12
Mouting hole X16
Mouting hole X3
Mouting hole X7
Mouting hole X11
Mouting hole X15
Mouting hole X19
Mouting hole X2
Mouting hole X6
Mouting hole X10
Mouting hole X14
Mouting hole X18
Mouting hole X1
Mouting hole X5
Mouting hole X9
Mouting hole X13
Mouting hole X17
VME_MT_HOLE
COMPANY:
TITLE:
DRAWN:
DATED:
CHECKED:
DATED:
QUALITY CONTROL:
DATED:
RELEASED:
DATED:
CODE:
SIZE:
DRAWING NO:
REV:
SCALE:
SHEET:
OF

REVISION RECORD			
LTR	ECO NO:	APPROVED:	DATE:

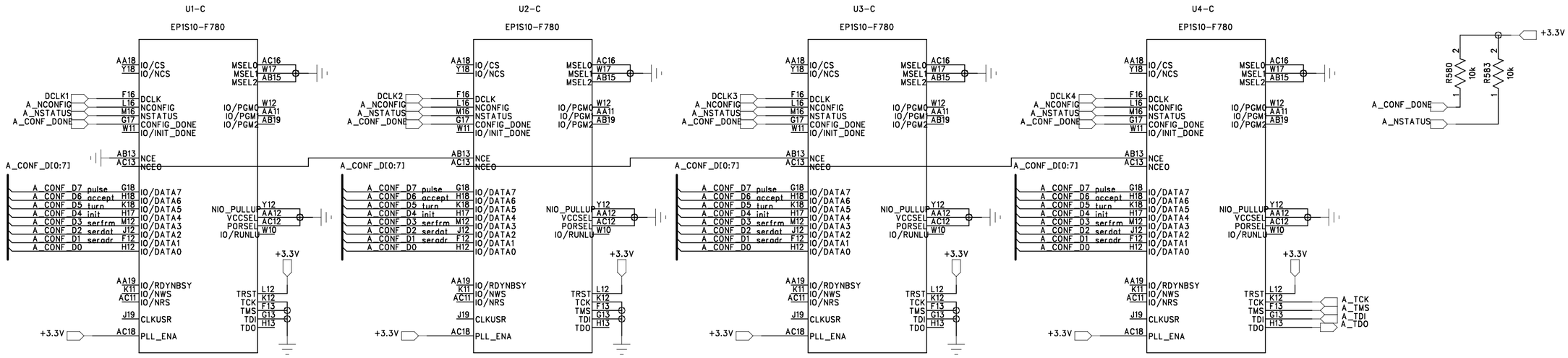

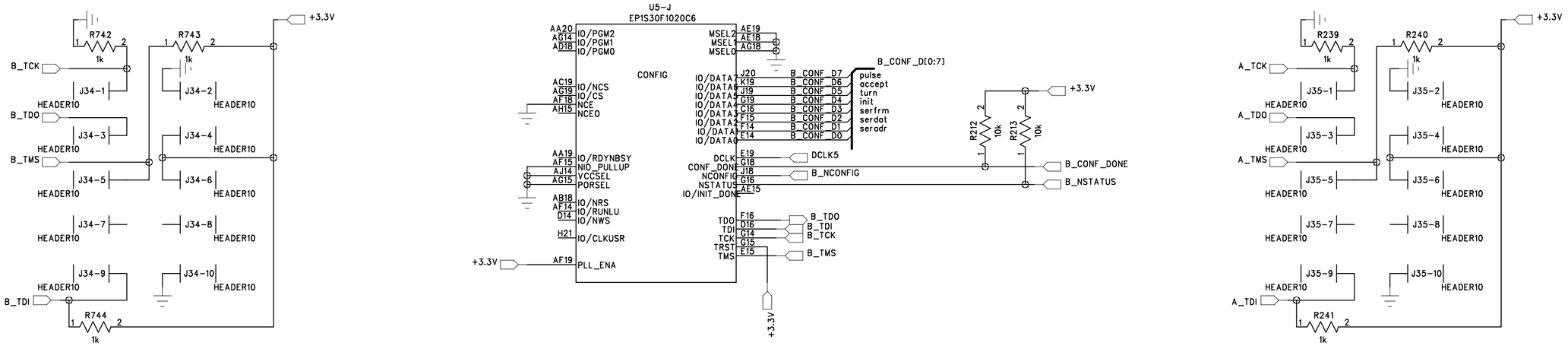

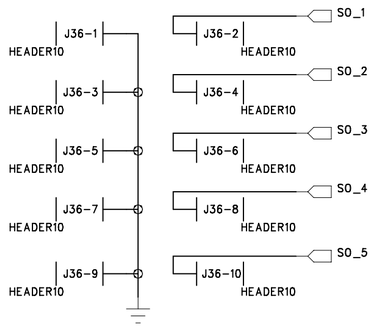

DRAWN:	DATED:	COMPANY:		
		TITLE:		
CHECKED:	DATED:	CODE:	SIZE:	DRAWING NO:	REV:
QUALITY CONTROL:	DATED:			
RELEASED:	DATED:	SCALE:	SHEET: OF	

REVISION RECORD			
LTR	ECO NO:	APPROVED:	DATE:

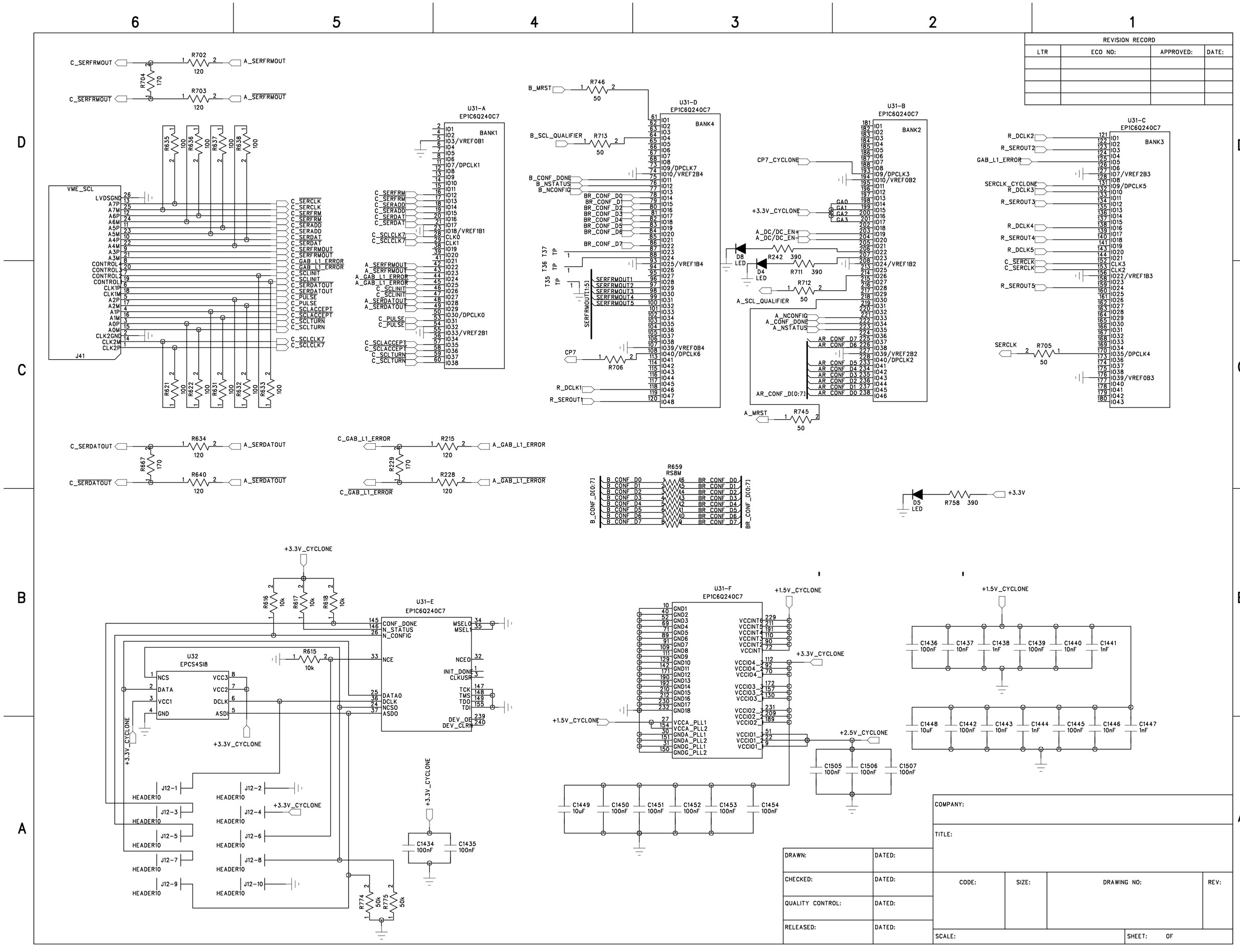

COMPANY:			
TITLE:			
DRAWN:	DATED:		
CHECKED:	DATED:	CODE:	SIZE:	DRAWING NO:	REV:
QUALITY CONTROL:	DATED:		
RELEASED:	DATED:	SCALE:	SHEET: OF

REVISION RECORD			
LTR	ECO NO:	APPROVED:	DATE:

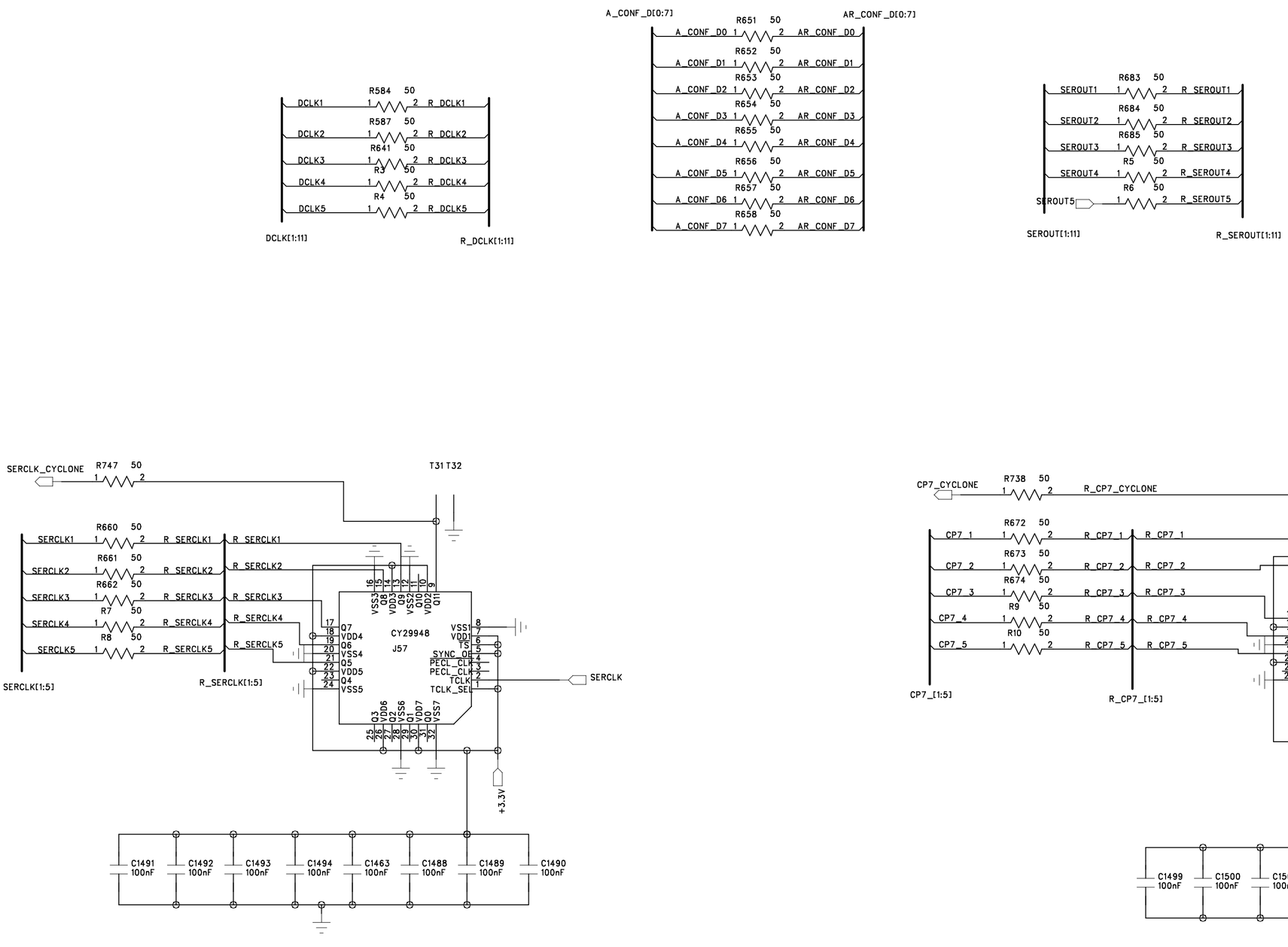

COMPANY:			
TITLE:			
DRAWN:	DATED:		
CHECKED:	DATED:	CODE:	SIZE:	DRAWING NO:	REV:
QUALITY CONTROL:	DATED:		
RELEASED:	DATED:	SCALE:	SHEET: OF

REVISION RECORD			
LTR	ECO NO:	APPROVED:	DATE:

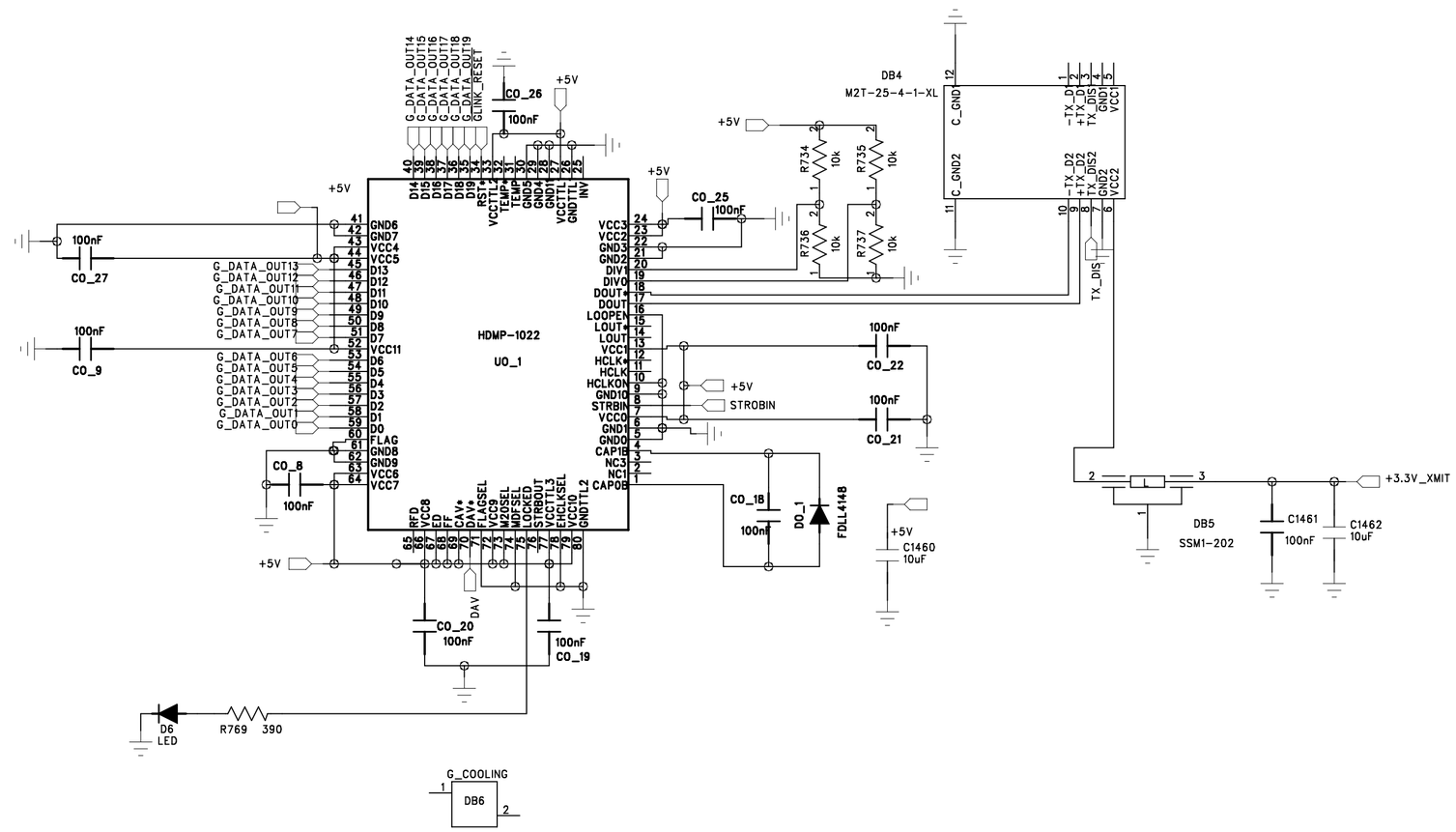

		COMPANY:			
		TITLE:			
DRAWN:	DATED:				
CHECKED:	DATED:	CODE:	SIZE:	DRAWING NO:	REV:
QUALITY CONTROL:	DATED:				
RELEASED:	DATED:	SCALE:		SHEET: OF	

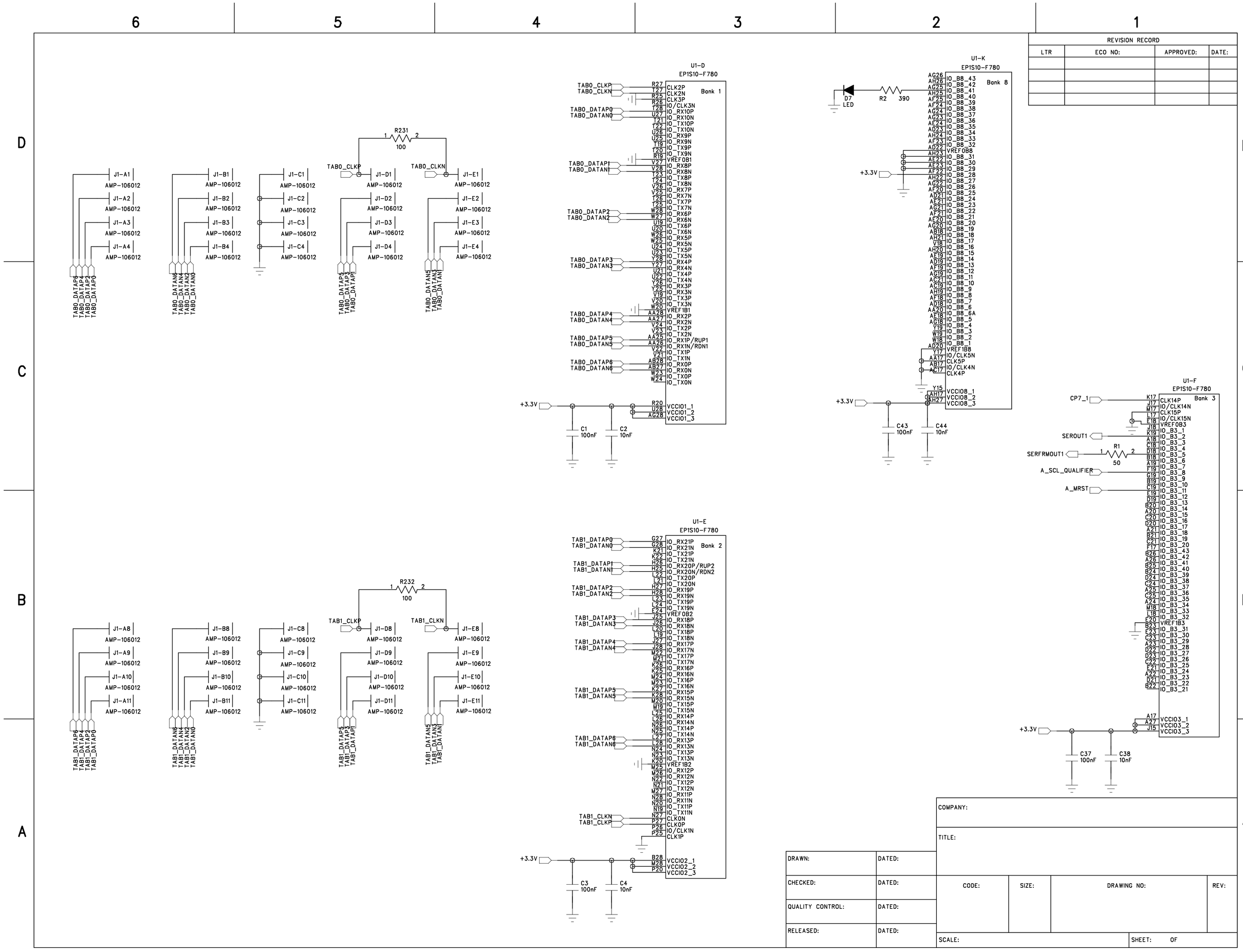
6
5
4
3
2
1
D
C
B
A
REVISION RECORD
LTR
ECO NO:
APPROVED:
DATE:
U1-D
EP1S10-F780
Bank 1
U1-K
EP1S10-F780
Bank 8
U1-F
EP1S10-F780
Bank 3
U1-E
EP1S10-F780
Bank 2
R231
100
R232
100
R1
50
R2
390
D7
LED
C1
100nF
C2
10nF
C3
100nF
C4
10nF
C37
100nF
C38
10nF
C43
100nF
C44
10nF
+3.3V
TAB0_CLKP
TAB0_CLKN
TAB1_CLKP
TAB1_CLKN
CP7_1
SEROUT1
SERFRMOUT1
A_SCL_QUALIFIER
A_MRST
COMPANY:
TITLE:
DRAWN:
DATED:
CHECKED:
DATED:
QUALITY CONTROL:
DATED:
RELEASED:
DATED:
CODE:
SIZE:
DRAWING NO:
REV:
SCALE:
SHEET:
OF

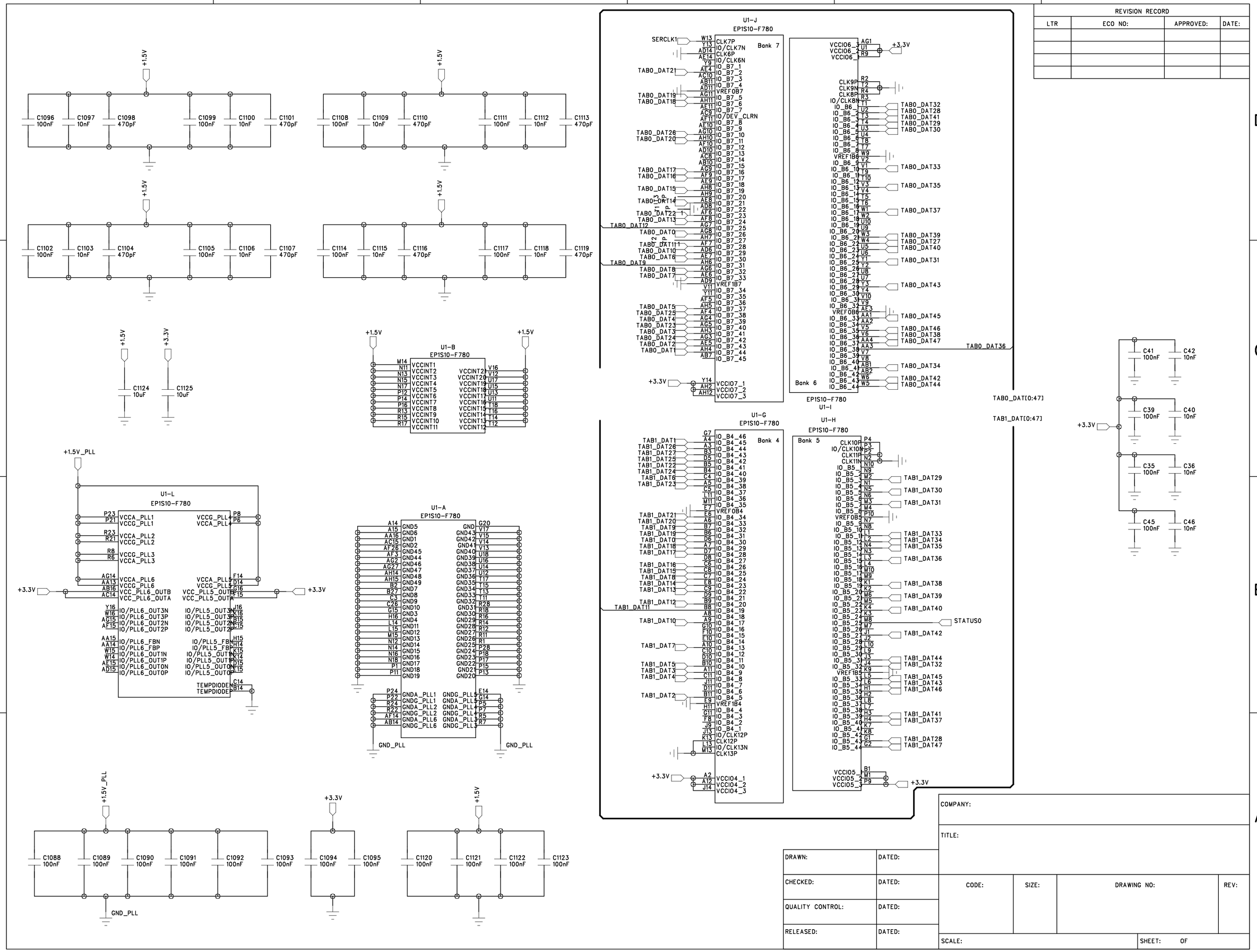

REVISION RECORD			
LTR	ECO NO:	APPROVED:	DATE:

COMPANY:			
TITLE:			
DRAWN:	DATED:	CODE:	SIZE:	DRAWING NO:	REV:
CHECKED:	DATED:				
QUALITY CONTROL:	DATED:				
RELEASED:	DATED:	SCALE:	SHEET: OF		

REVISION RECORD			
LTR	ECO NO:	APPROVED:	DATE:

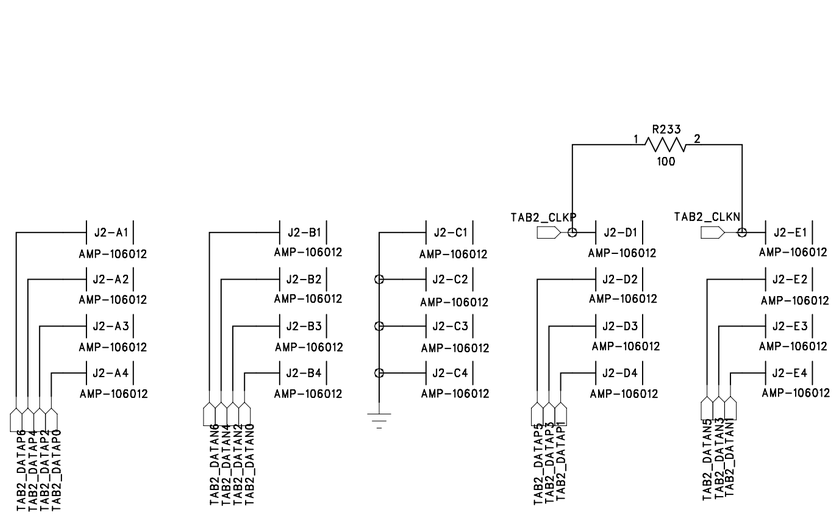

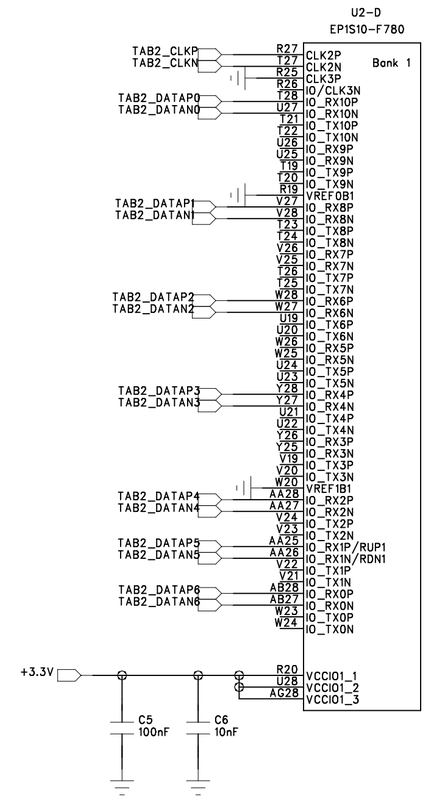

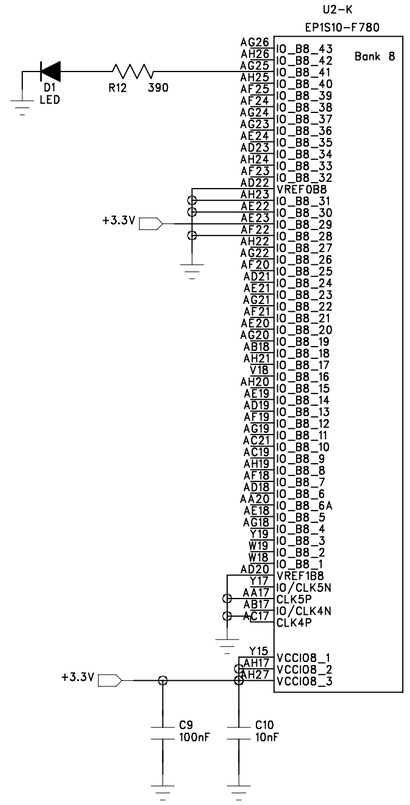

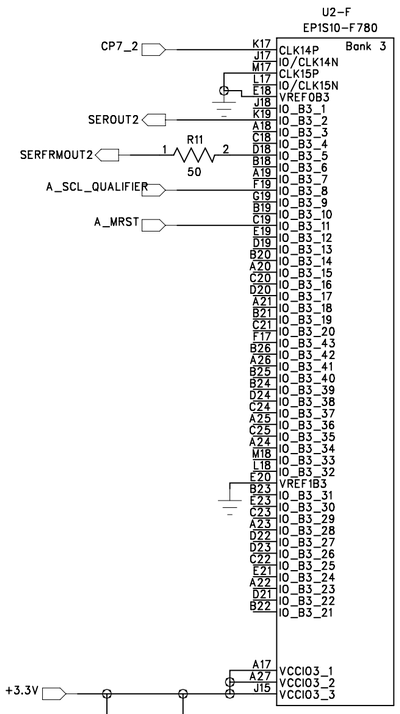

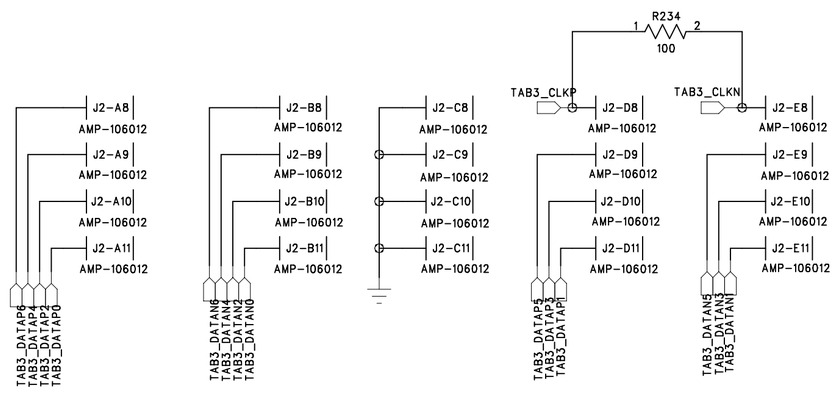

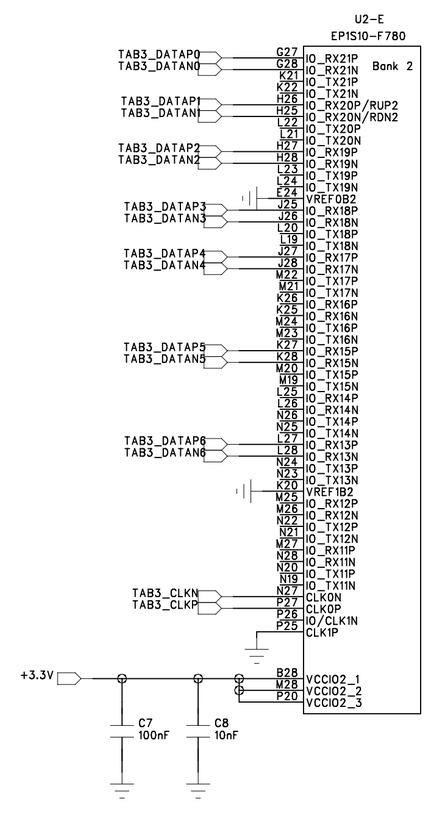

DRAWN:	DATED:	COMPANY:			
		TITLE:			
CHECKED:	DATED:	CODE:	SIZE:	DRAWING NO:	REV:
QUALITY CONTROL:	DATED:				
RELEASED:	DATED:	SCALE:		SHEET: OF	

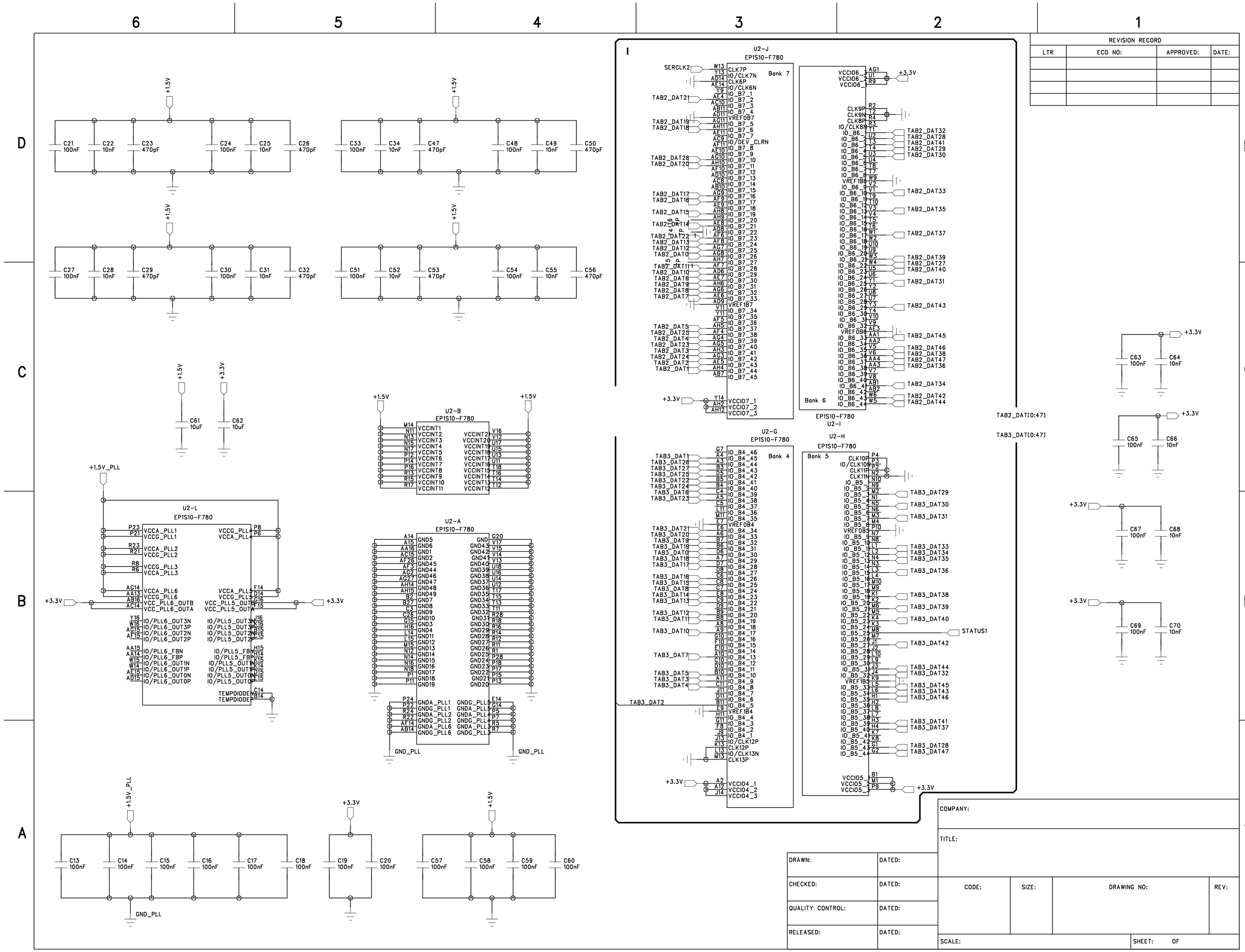

REVISION RECORD			
LTR	ECO NO:	APPROVED:	DATE:

COMPANY:				
TITLE:				
DRAWN:	DATED:	CODE:	SIZE:	DRAWING NO:	REV:
CHECKED:	DATED:			
QUALITY CONTROL:	DATED:			
RELEASED:	DATED:	SCALE:	SHEET: OF	

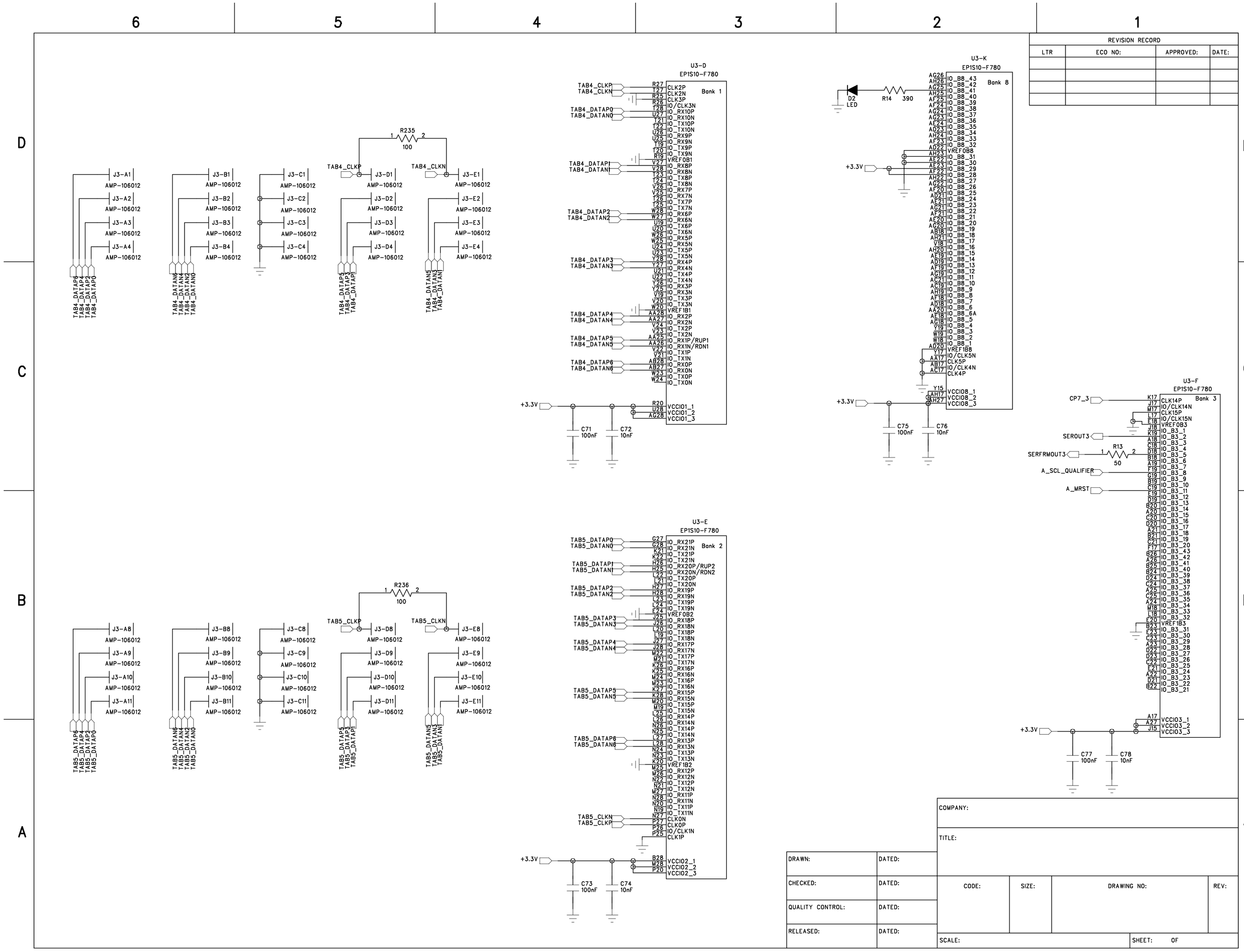
U3-D
EP1S10-F780
Bank 1
U3-K
EP1S10-F780
Bank 8
U3-F
EP1S10-F780
Bank 3
U3-E
EP1S10-F780
Bank 2
R235
100
R236
100
R14
390
R13
50
D2
LED
+3.3V
C71
100nF
C72
10nF
C75
100nF
C76
10nF
C77
100nF
C78
10nF
C73
100nF
C74
10nF
TAB4_CLKP
TAB4_CLKN
TAB5_CLKP
TAB5_CLKN
CP7_3
SEROUT3
SERFRMOUT3
A_SCL_QUALIFIER
A_MRST
REVISION RECORD
LTR
ECO NO:
APPROVED:
DATE:
COMPANY:
TITLE:
DRAWN:
DATED:
CHECKED:
DATED:
QUALITY CONTROL:
DATED:
RELEASED:
DATED:
CODE:
SIZE:
DRAWING NO:
REV:
SCALE:
SHEET:
OF

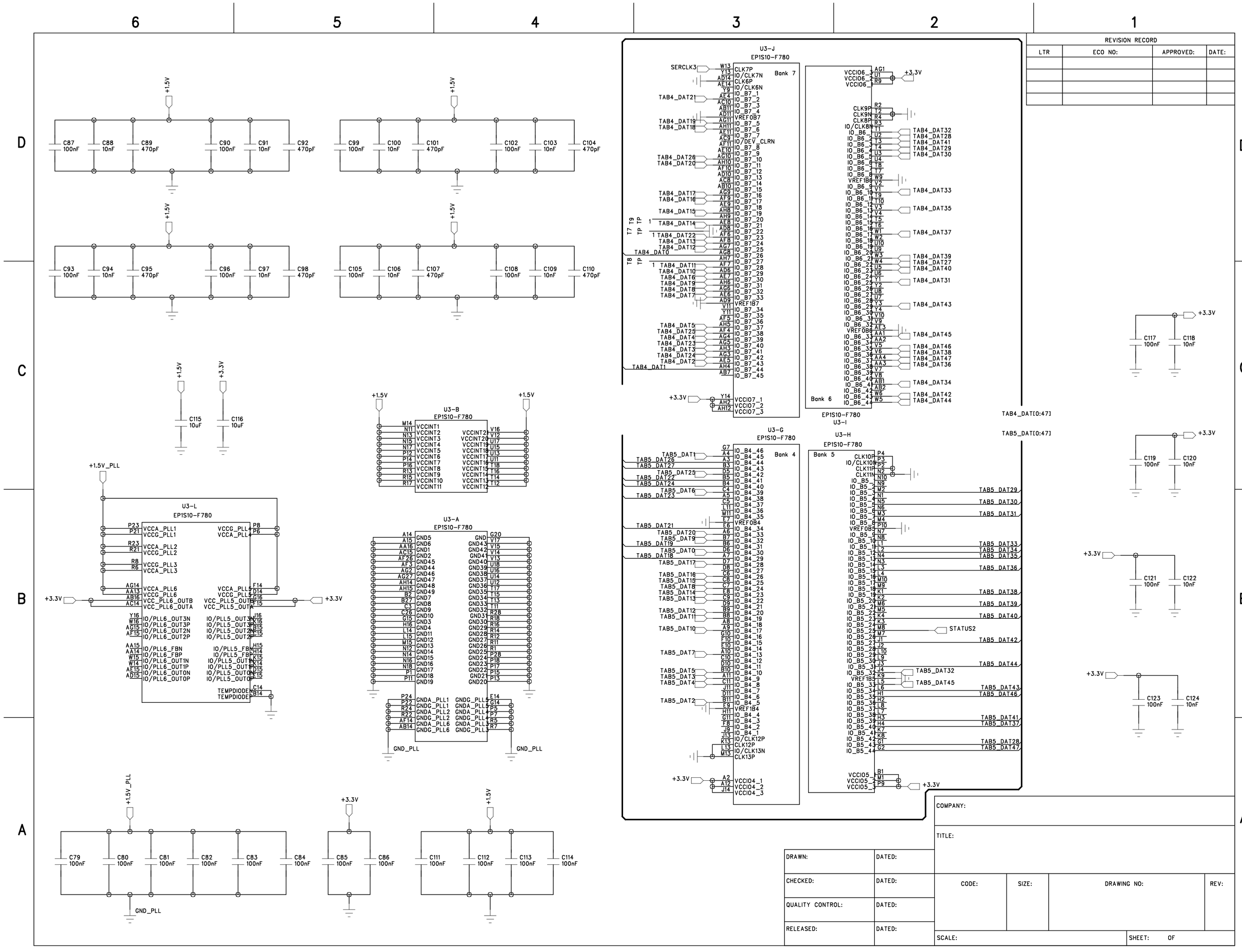

REVISION RECORD

LTR	ECO NO:	APPROVED:	DATE:

COMPANY:			
TITLE:			
DRAWN:	DATED:		
CHECKED:	DATED:	CODE:	SIZE:	DRAWING NO:	REV:
QUALITY CONTROL:	DATED:		
RELEASED:	DATED:	SCALE:	SHEET: OF

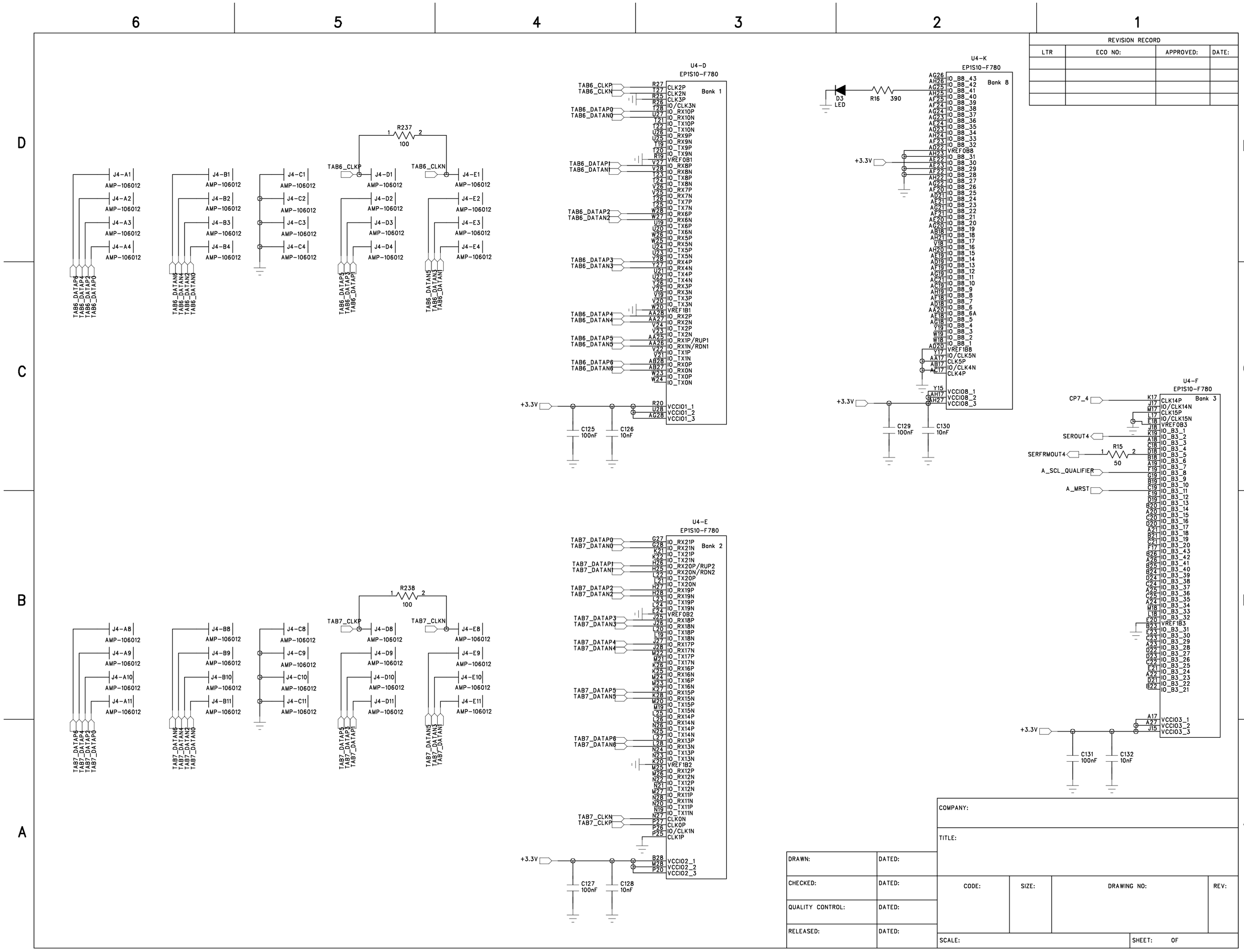
6
5
4
3
2
1
D
C
B
A
REVISION RECORD
LTR
ECO NO:
APPROVED:
DATE:
U4-D
EP1S10-F780
Bank 1
U4-K
EP1S10-F780
Bank 8
U4-F
EP1S10-F780
Bank 3
U4-E
EP1S10-F780
Bank 2
R237
100
R238
100
R15
50
R16
390
D3
LED
+3.3V
C125
100nF
C126
10nF
C129
100nF
C130
10nF
C131
100nF
C132
10nF
C127
100nF
C128
10nF
TAB6_CLKP
TAB6_CLKN
TAB6_DATAP0
TAB6_DATAN0
TAB6_DATAP1
TAB6_DATAN1
TAB6_DATAP2
TAB6_DATAN2
TAB6_DATAP3
TAB6_DATAN3
TAB6_DATAP4
TAB6_DATAN4
TAB6_DATAP5
TAB6_DATAN5
TAB6_DATAP6
TAB6_DATAN6
TAB7_CLKP
TAB7_CLKN
TAB7_DATAP0
TAB7_DATAN0
TAB7_DATAP1
TAB7_DATAN1
TAB7_DATAP2
TAB7_DATAN2
TAB7_DATAP3
TAB7_DATAN3
TAB7_DATAP4
TAB7_DATAN4
TAB7_DATAP5
TAB7_DATAN5
TAB7_DATAP6
TAB7_DATAN6
CP7_4
SEROUT4
SERFRMOUT4
A_SCL_QUALIFIER
A_MRST
COMPANY:
TITLE:
DRAWN:
DATED:
CHECKED:
DATED:
QUALITY CONTROL:
DATED:
RELEASED:
DATED:
CODE:
SIZE:
DRAWING NO:
REV:
SCALE:
SHEET:
OF

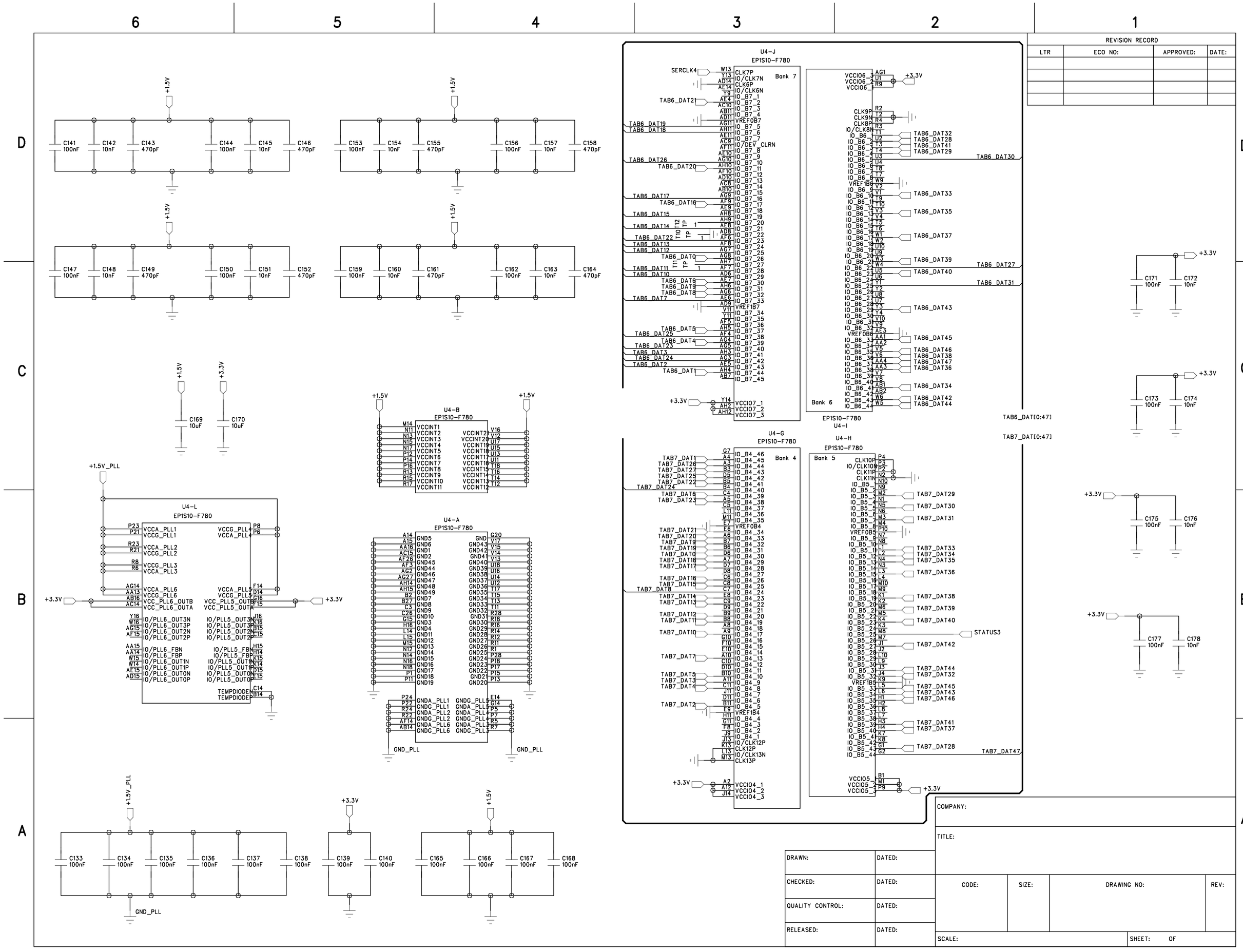
6
5
4
3
2
1
D
C
B
A
+1.5V
C141 100nF
C142 10nF
C143 470pF
C144 100nF
C145 10nF
C146 470pF
C153 100nF
C154 10nF
C155 470pF
C156 100nF
C157 10nF
C158 470pF
C147 100nF
C148 10nF
C149 470pF
C150 100nF
C151 10nF
C152 470pF
C159 100nF
C160 10nF
C161 470pF
C162 100nF
C163 10nF
C164 470pF
+3.3V
C169 10uF
C170 10uF
+1.5V_PLL
U4-L
EP1S10-F780
VCCA_PLL1
VCCG_PLL1
VCCA_PLL2
VCCG_PLL2
VCCG_PLL3
VCCA_PLL3
VCCA_PLL6
VCCG_PLL6
VCC_PLL6_OUTB
VCC_PLL6_OUTA
VCCG_PLL4
VCCA_PLL4
VCCA_PLL5
VCCG_PLL5
VCC_PLL5_OUTB
VCC_PLL5_OUTA
IO/PLL6_OUT3N
IO/PLL6_OUT3P
IO/PLL6_OUT2N
IO/PLL6_OUT2P
IO/PLL6_FBN
IO/PLL6_FBP
IO/PLL6_OUT1N
IO/PLL6_OUT1P
IO/PLL6_OUT0N
IO/PLL6_OUT0P
IO/PLL5_OUT3N
IO/PLL5_OUT3P
IO/PLL5_OUT2N
IO/PLL5_OUT2P
IO/PLL5_FBN
IO/PLL5_FBP
IO/PLL5_OUT1N
IO/PLL5_OUT1P
IO/PLL5_OUT0N
IO/PLL5_OUT0P
TEMPDIODEN
TEMPDIODEP
U4-B
EP1S10-F780
VCCINT1
VCCINT2
VCCINT3
VCCINT4
VCCINT5
VCCINT6
VCCINT7
VCCINT8
VCCINT9
VCCINT10
VCCINT11
VCCINT12
VCCINT20
VCCINT19
VCCINT18
VCCINT17
VCCINT16
VCCINT15
VCCINT14
VCCINT13
U4-A
EP1S10-F780
GND5
GND6
GND1
GND2
GND45
GND44
GND46
GND47
GND48
GND49
GND7
GND8
GND9
GND10
GND3
GND4
GND11
GND12
GND13
GND14
GND15
GND16
GND17
GND18
GND19
GND
GND43
GND42
GND41
GND40
GND39
GND38
GND37
GND36
GND35
GND34
GND33
GND32
GND31
GND30
GND29
GND28
GND27
GND26
GND25
GND24
GND23
GND22
GND21
GND20
GNDA_PLL1
GNDG_PLL1
GNDA_PLL2
GNDG_PLL2
GNDA_PLL6
GNDG_PLL6
GNDG_PLL5
GNDA_PLL5
GNDA_PLL4
GNDG_PLL4
GNDA_PLL3
GNDG_PLL3
GND_PLL
U4-J
EP1S10-F780
Bank 7
SERCLK4
CLK7P
IO/CLK7N
CLK6P
IO/CLK6N
TAB6_DAT21
TAB6_DAT19
TAB6_DAT18
VREF0B7
TAB6_DAT26
TAB6_DAT20
IO/DEV_CLRN
TAB6_DAT17
TAB6_DAT16
TAB6_DAT15
TAB6_DAT14
TAB6_DAT22
TAB6_DAT13
TAB6_DAT12
TAB6_DAT0
TAB6_DAT11
TAB6_DAT10
TAB6_DAT6
TAB6_DAT9
TAB6_DAT8
TAB6_DAT7
VREF1B7
TAB6_DAT5
TAB6_DAT25
TAB6_DAT4
TAB6_DAT23
TAB6_DAT3
TAB6_DAT24
TAB6_DAT2
TAB6_DAT1
VCCIO7_1
VCCIO7_2
VCCIO7_3
U4-I
EP1S10-F780
Bank 6
VCCIO6_3
VCCIO6_2
VCCIO6_1
CLK9P
CLK9N
CLK8P
IO/CLK8N
VREF1B6
VREF0B6
TAB6_DAT32
TAB6_DAT28
TAB6_DAT41
TAB6_DAT29
TAB6_DAT30
TAB6_DAT33
TAB6_DAT35
TAB6_DAT37
TAB6_DAT39
TAB6_DAT27
TAB6_DAT40
TAB6_DAT31
TAB6_DAT43
TAB6_DAT45
TAB6_DAT46
TAB6_DAT38
TAB6_DAT47
TAB6_DAT36
TAB6_DAT34
TAB6_DAT42
TAB6_DAT44
TAB6_DAT[0:47]
U4-G
EP1S10-F780
Bank 4
TAB7_DAT1
TAB7_DAT26
TAB7_DAT27
TAB7_DAT25
TAB7_DAT22
TAB7_DAT24
TAB7_DAT6
TAB7_DAT23
TAB7_DAT21
TAB7_DAT20
TAB7_DAT19
TAB7_DAT18
TAB7_DAT0
TAB7_DAT17
TAB7_DAT16
TAB7_DAT15
TAB7_DAT8
TAB7_DAT14
TAB7_DAT13
TAB7_DAT12
TAB7_DAT11
TAB7_DAT10
TAB7_DAT7
TAB7_DAT5
TAB7_DAT3
TAB7_DAT4
TAB7_DAT2
IO/CLK12P
CLK12P
IO/CLK13N
CLK13P
VCCIO4_1
VCCIO4_2
VCCIO4_3
U4-H
EP1S10-F780
Bank 5
CLK10P
IO/CLK10N
CLK11P
CLK11N
VREF0B5
VREF1B5
TAB7_DAT29
TAB7_DAT30
TAB7_DAT31
TAB7_DAT33
TAB7_DAT34
TAB7_DAT35
TAB7_DAT36
TAB7_DAT38
TAB7_DAT39
TAB7_DAT40
STATUS3
TAB7_DAT42
TAB7_DAT44
TAB7_DAT32
TAB7_DAT45
TAB7_DAT43
TAB7_DAT46
TAB7_DAT41
TAB7_DAT37
TAB7_DAT28
TAB7_DAT47
TAB7_DAT[0:47]
VCCIO5_1
VCCIO5_2
VCCIO5_3
C171 100nF
C172 10nF
C173 100nF
C174 10nF
C175 100nF
C176 10nF
C177 100nF
C178 10nF
C133 100nF
C134 100nF
C135 100nF
C136 100nF
C137 100nF
C138 100nF
C139 100nF
C140 100nF
C165 100nF
C166 100nF
C167 100nF
C168 100nF
REVISION RECORD
LTR
ECO NO:
APPROVED:
DATE:
COMPANY:
TITLE:
DRAWN:
DATED:
CHECKED:
DATED:
QUALITY CONTROL:
DATED:
RELEASED:
DATED:
CODE:
SIZE:
DRAWING NO:
REV:
SCALE:
SHEET:
OF

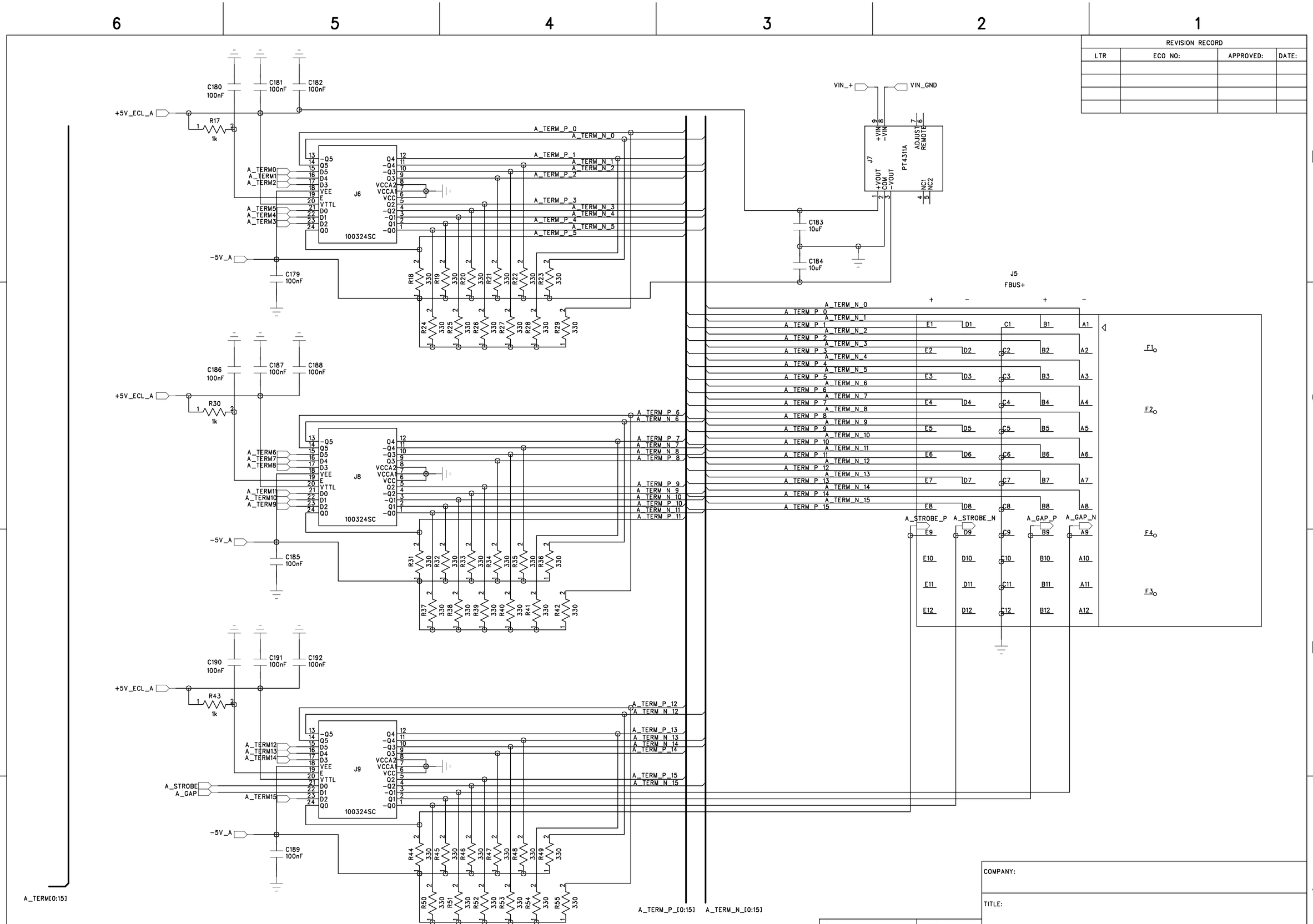

REVISION RECORD			
LTR	ECO NO:	APPROVED:	DATE:

COMPANY:				
TITLE:				
DRAWN:	DATED:	CODE:	SIZE:	DRAWING NO:	REV:
CHECKED:	DATED:			
QUALITY CONTROL:	DATED:			
RELEASED:	DATED:	SCALE:	SHEET: OF	

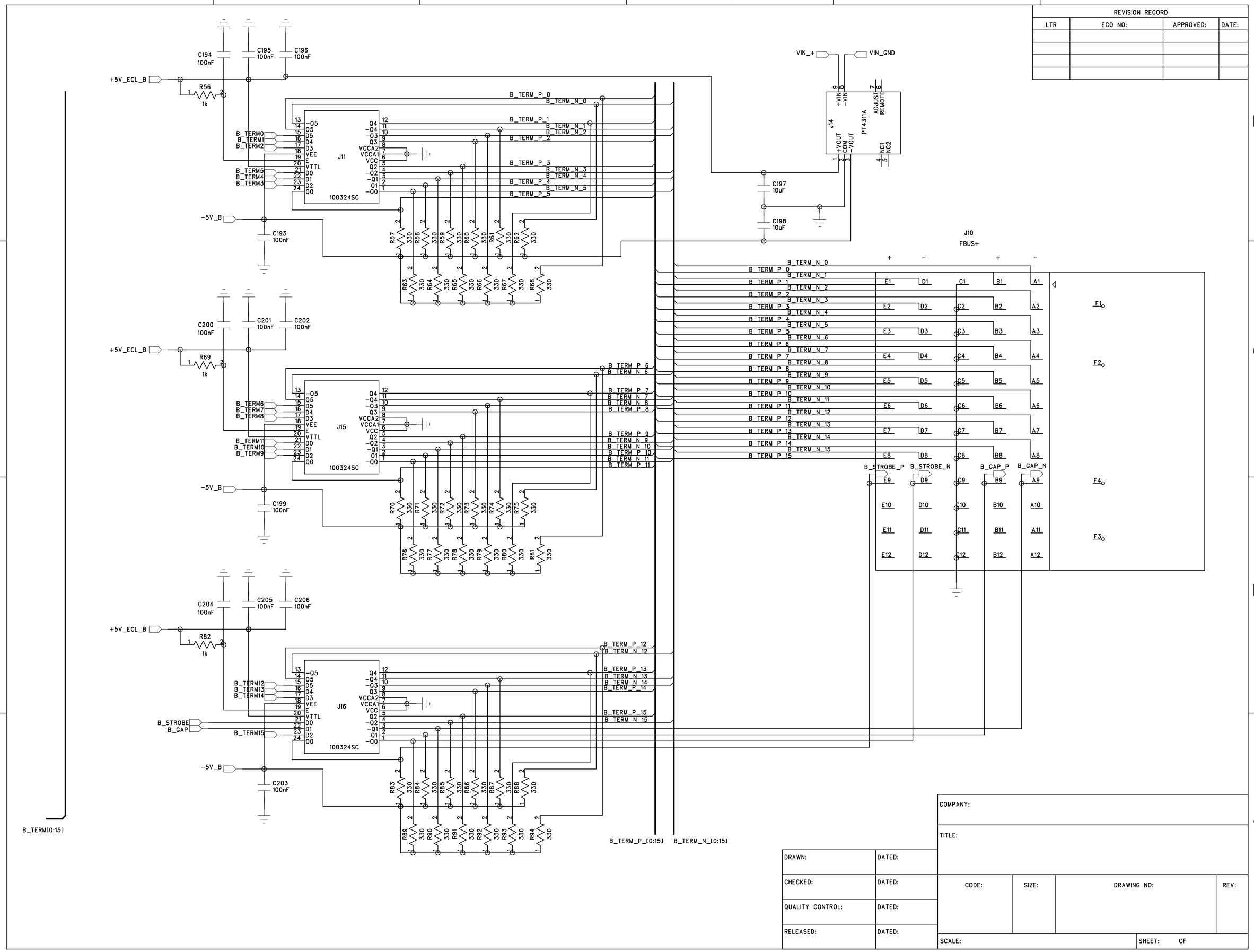

REVISION RECORD			
LTR	ECO NO:	APPROVED:	DATE:

COMPANY:					
TITLE:					
DRAWN:	DATED:	CODE:	SIZE:	DRAWING NO:	REV:
CHECKED:	DATED:				
QUALITY CONTROL:	DATED:				
RELEASED:	DATED:	SCALE:		SHEET: OF	

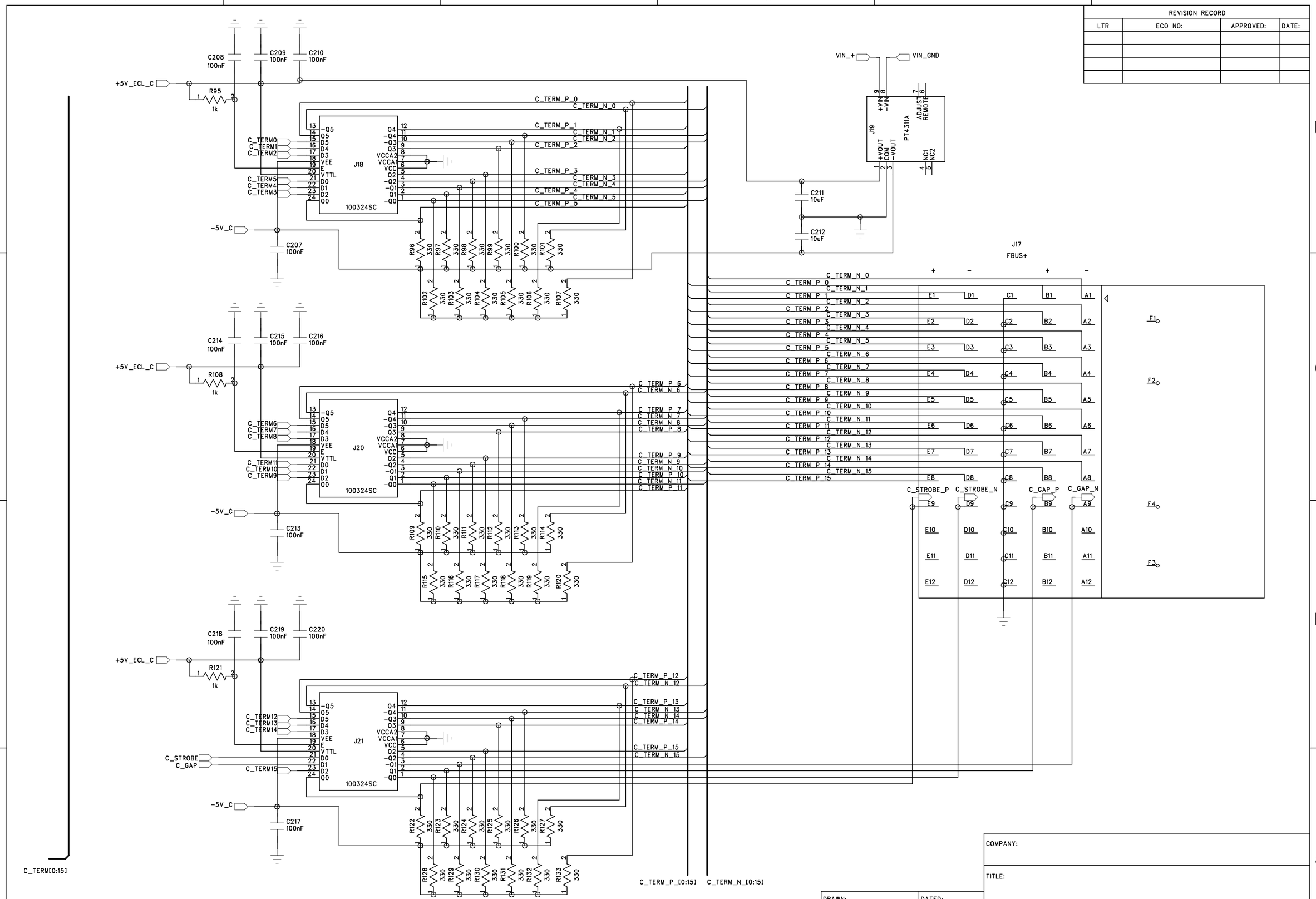

REVISION RECORD			
LTR	ECO NO:	APPROVED:	DATE:

COMPANY:			
TITLE:			
DRAWN:	DATED:	CODE:	SIZE:	DRAWING NO:	REV:
CHECKED:	DATED:				
QUALITY CONTROL:	DATED:				
RELEASED:	DATED:	SCALE:	SHEET: OF		

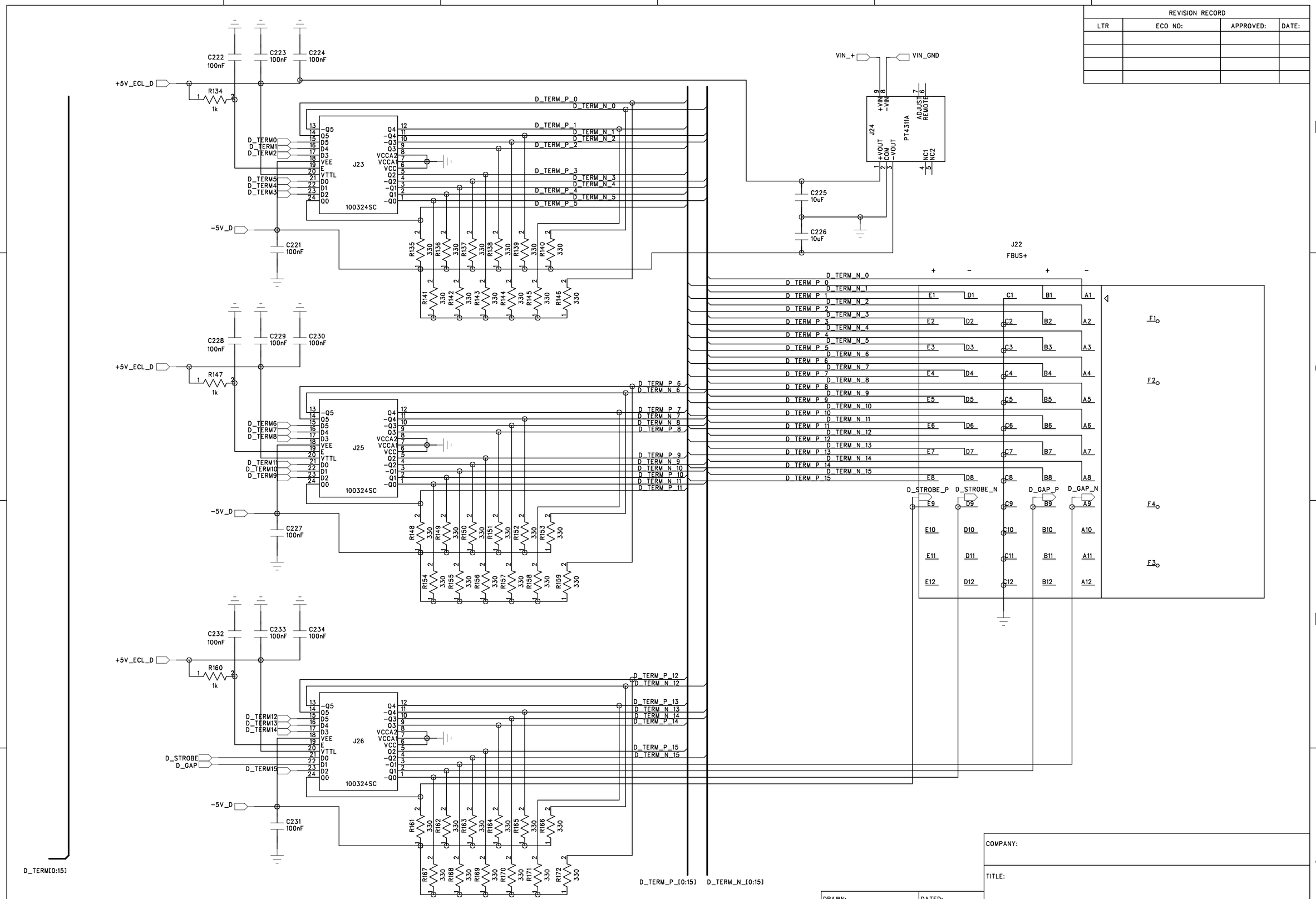

REVISION RECORD			
LTR	ECO NO:	APPROVED:	DATE:

COMPANY:					
TITLE:					
DRAWN:	DATED:	CODE:	SIZE:	DRAWING NO:	REV:
CHECKED:	DATED:				
QUALITY CONTROL:	DATED:				
RELEASED:	DATED:	SCALE:		SHEET: OF	

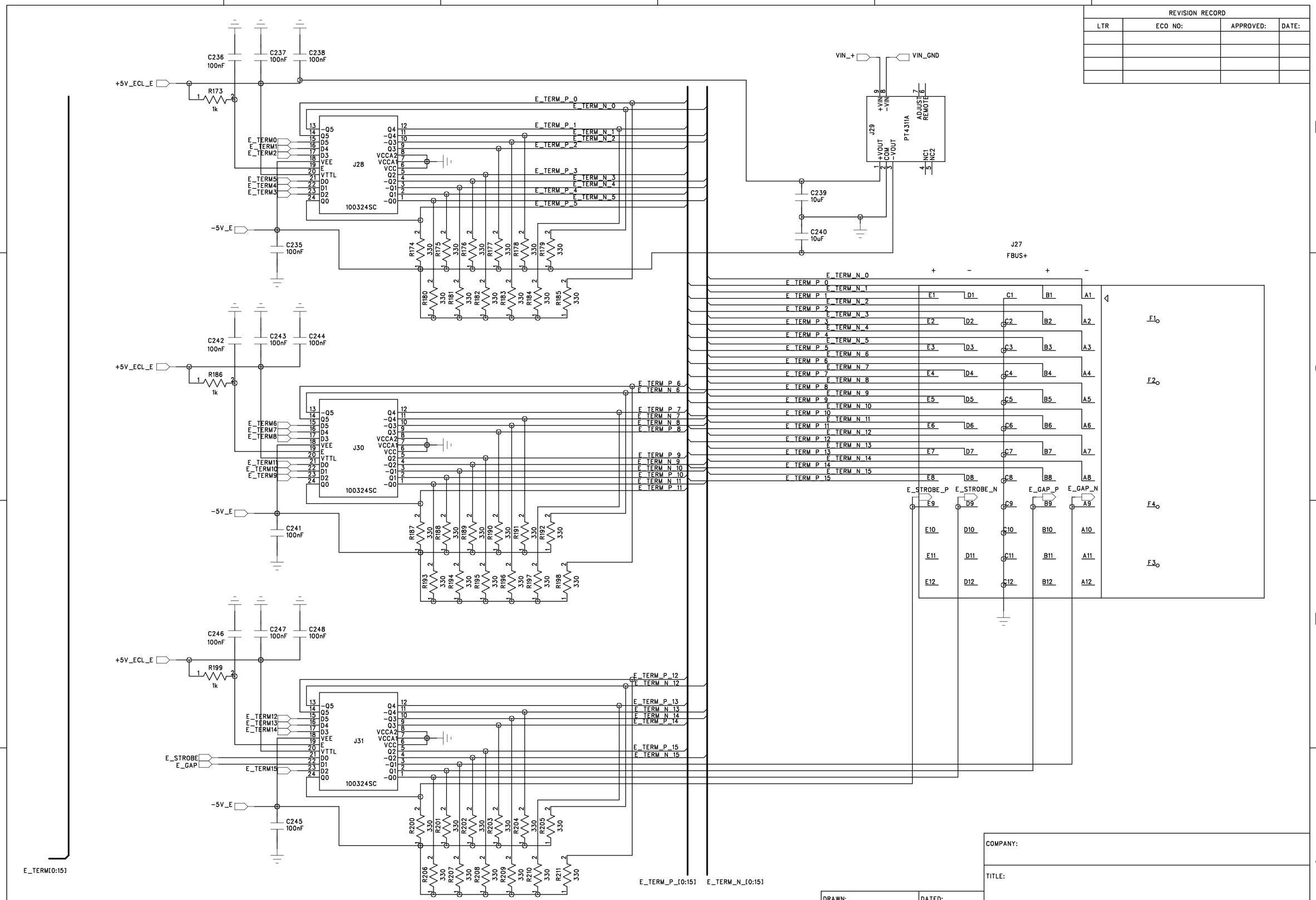

REVISION RECORD			
LTR	ECO NO:	APPROVED:	DATE:

COMPANY:					
TITLE:					
DRAWN:	DATED:	CODE:	SIZE:	DRAWING NO:	REV:
CHECKED:	DATED:				
QUALITY CONTROL:	DATED:				
RELEASED:	DATED:	SCALE:		SHEET: OF	

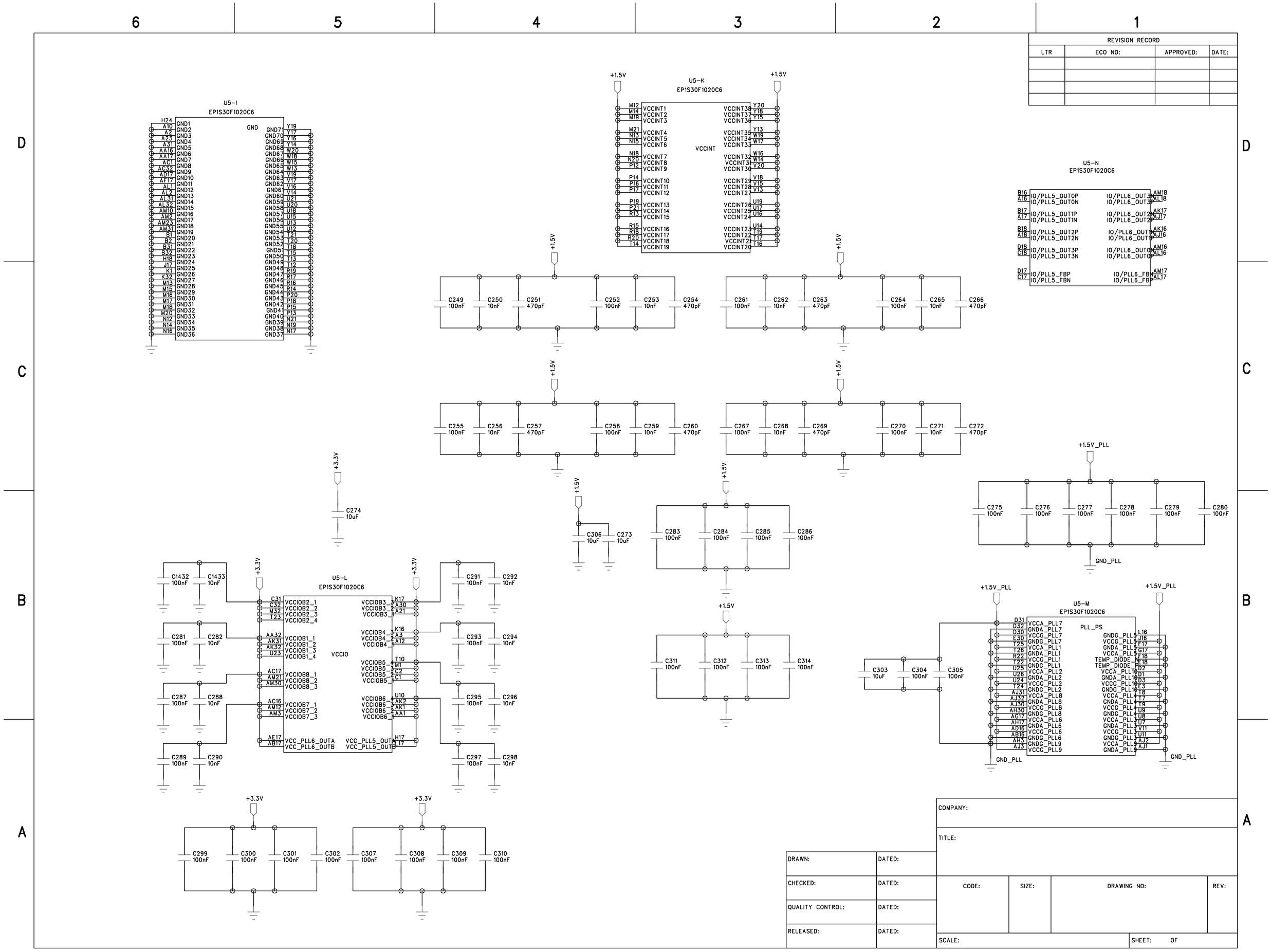

REVISION RECORD			
LTR	ECO NO:	APPROVED:	DATE:

DRAWN:	DATED:		
CHECKED:	DATED:		
QUALITY CONTROL:	DATED:		
RELEASED:	DATED:		

COMPANY:

TITLE:

CODE:	SIZE:	DRAWING NO:	REV:

SCALE: SHEET: OF

REVISION RECORD			
LTR	ECO NO:	APPROVED:	DATE:

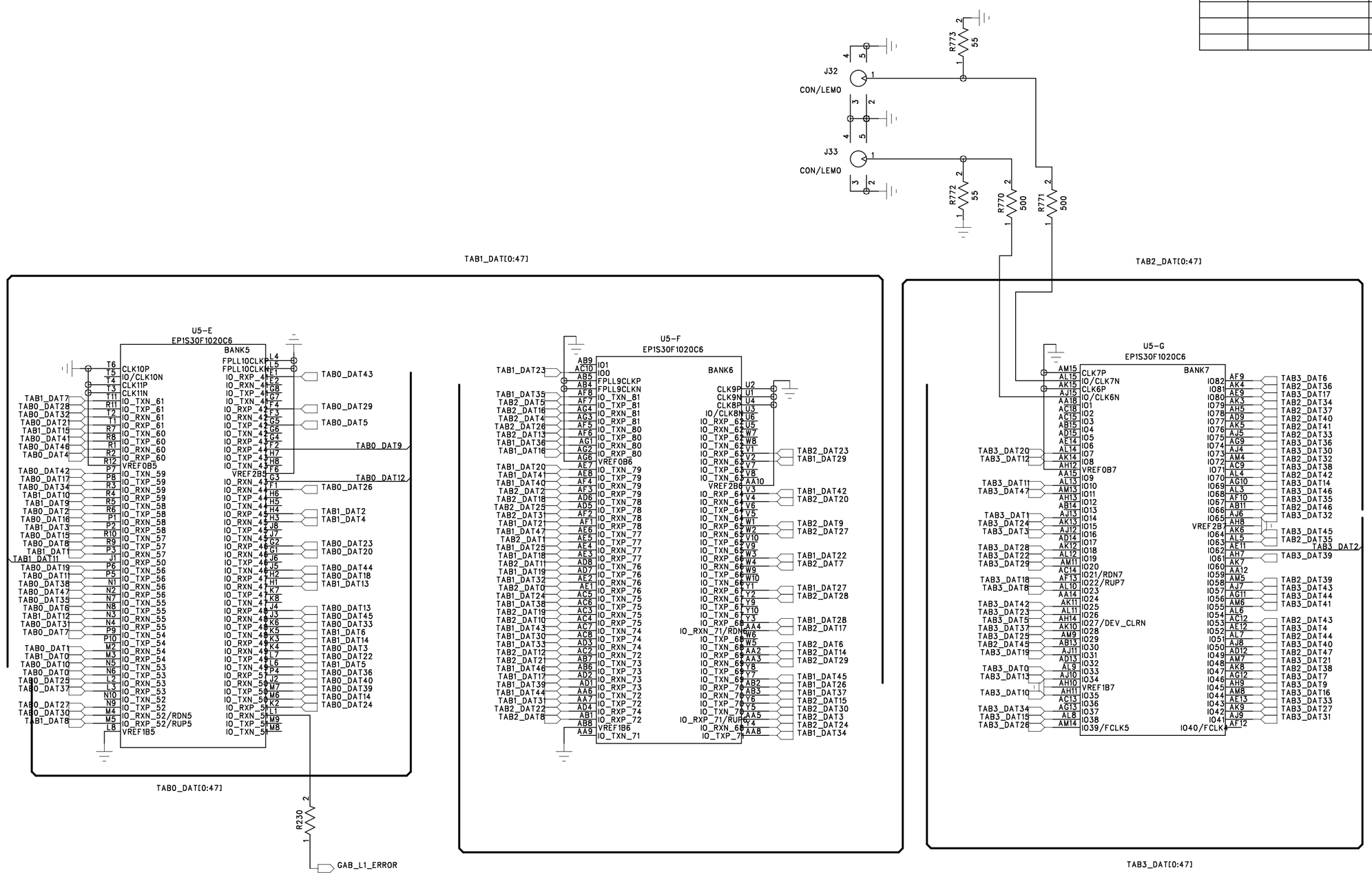

COMPANY:			
TITLE:			
DRAWN:	DATED:		
CHECKED:	DATED:	CODE:	SIZE:	DRAWING NO:	REV:
QUALITY CONTROL:	DATED:		
RELEASED:	DATED:	SCALE:	SHEET: OF

REVISION RECORD			
LTR	ECO NO:	APPROVED:	DATE:

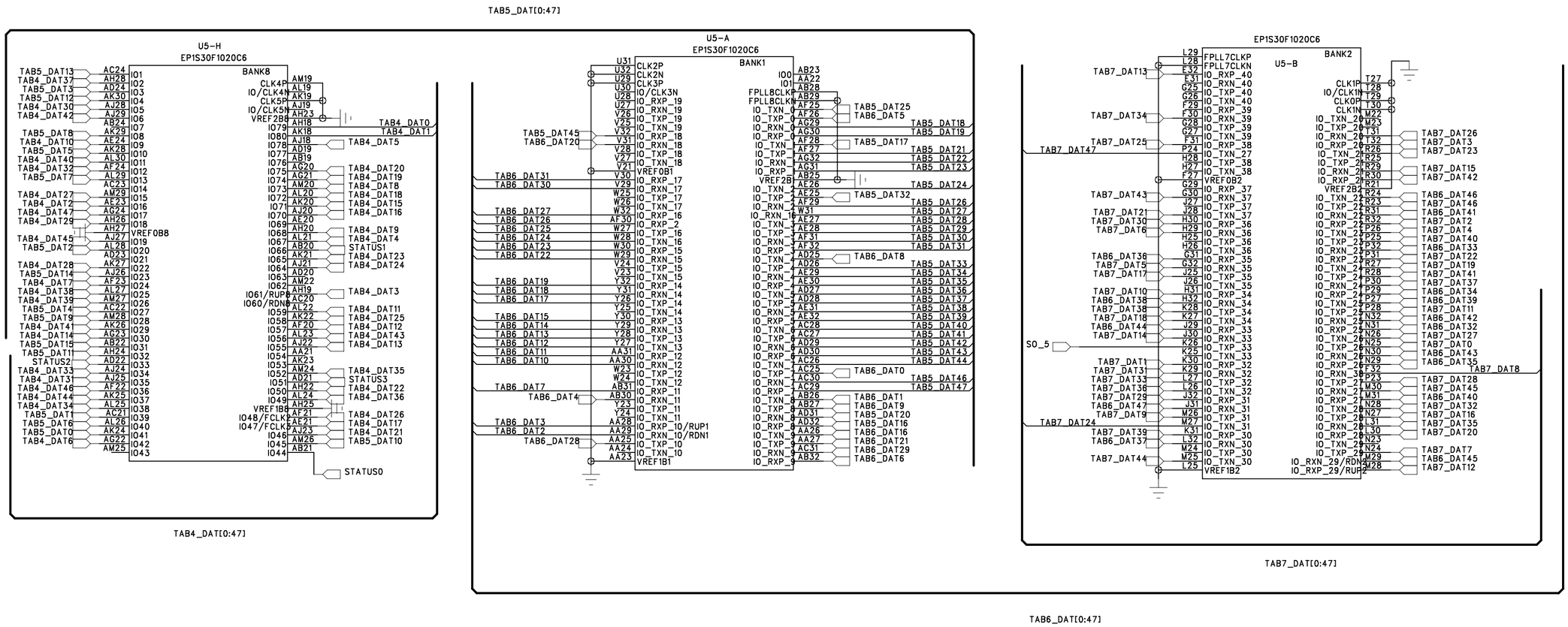

COMPANY:			
TITLE:			
DRAWN:	DATED:		
CHECKED:	DATED:	CODE:	SIZE:	DRAWING NO:	REV:
QUALITY CONTROL:	DATED:				
RELEASED:	DATED:	SCALE:	SHEET: OF		

REVISION RECORD			
LTR	ECO NO:	APPROVED:	DATE:

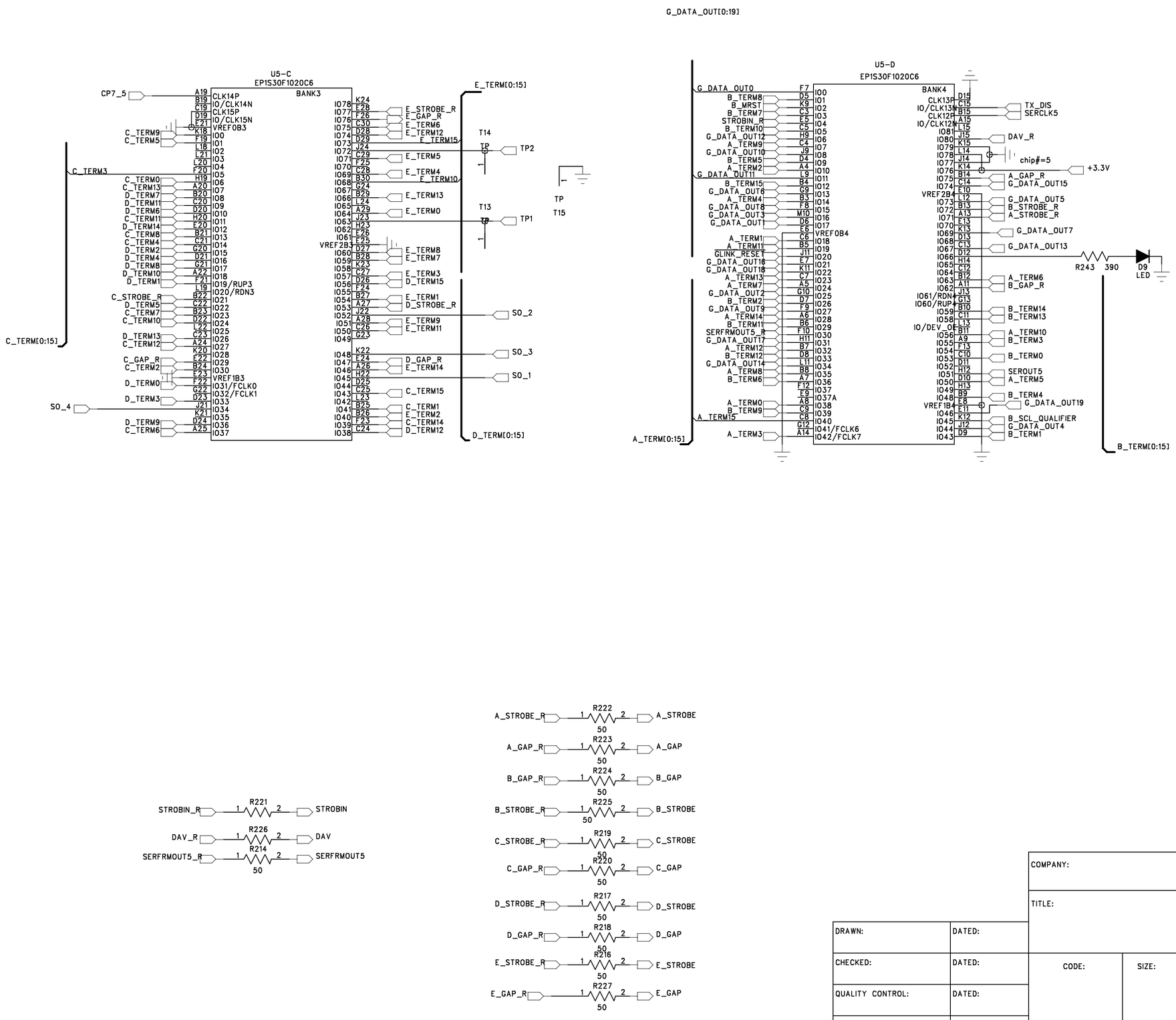

COMPANY:			
TITLE:			
DRAWN:	DATED:		
CHECKED:	DATED:	CODE:	SIZE:	DRAWING NO:	REV:
QUALITY CONTROL:	DATED:		
RELEASED:	DATED:	SCALE:	SHEET: OF