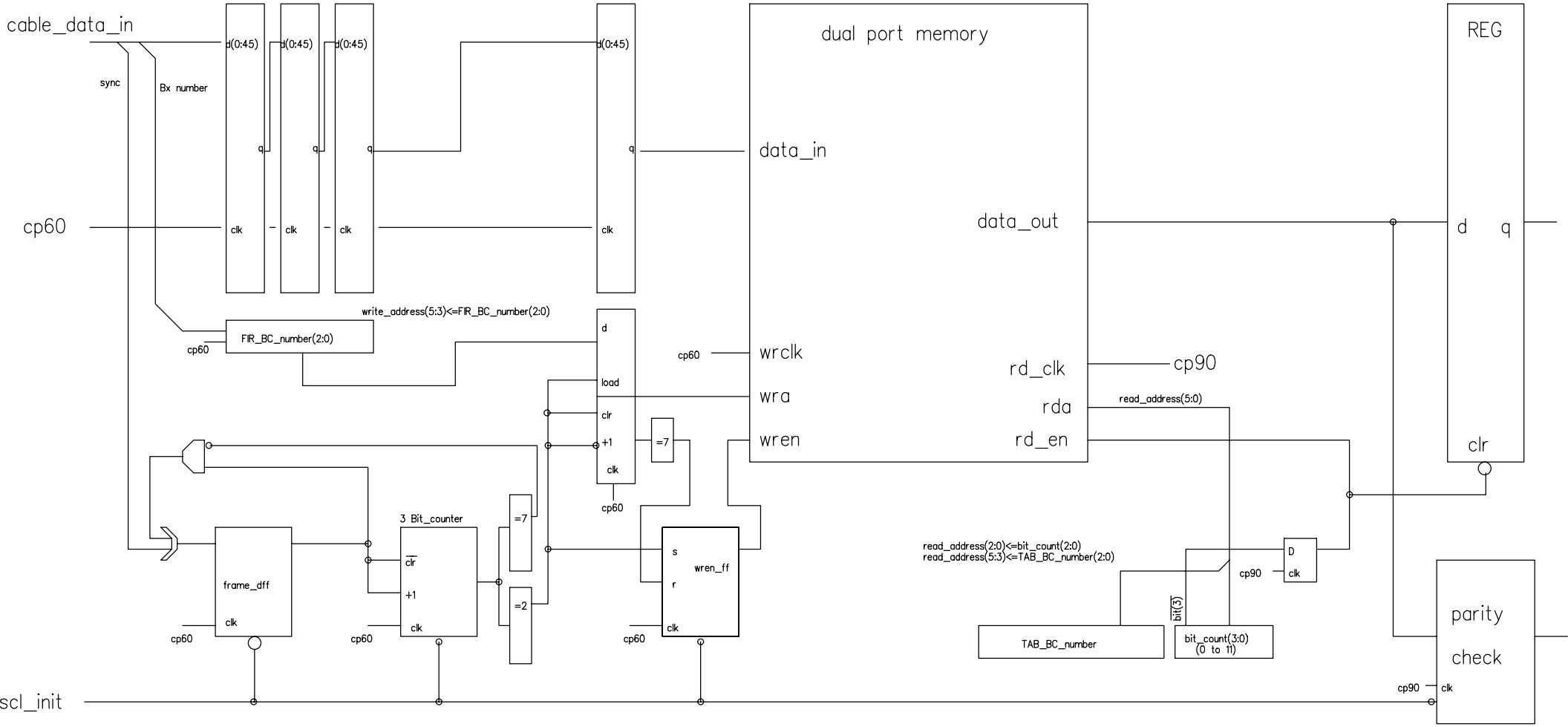Cable_buffer module: – Receives the data (8 bit words at 60MHz) from ADF and generates 12 bit words (90 MHz)
– Synchronizes data in the DP with BC number