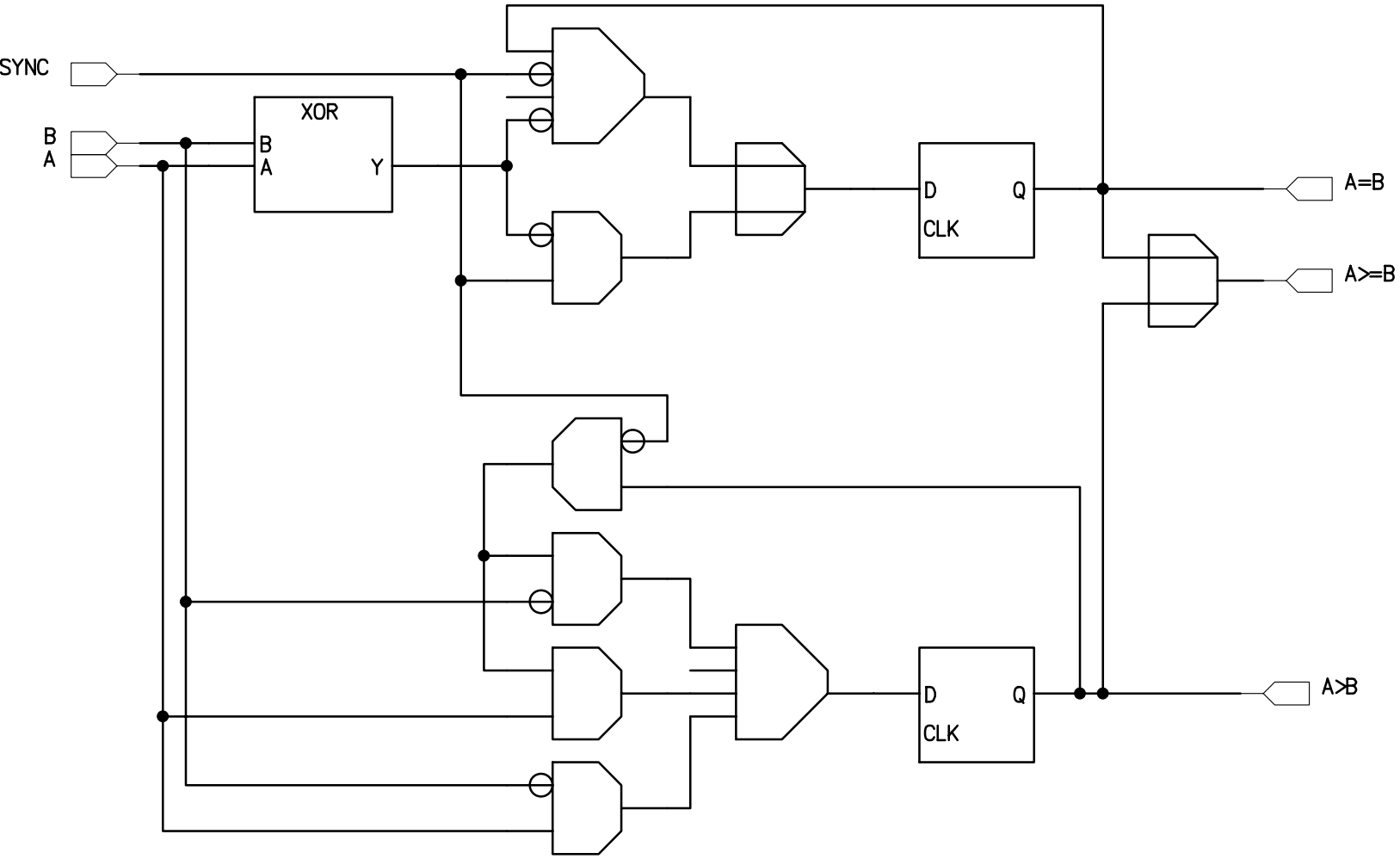comparator