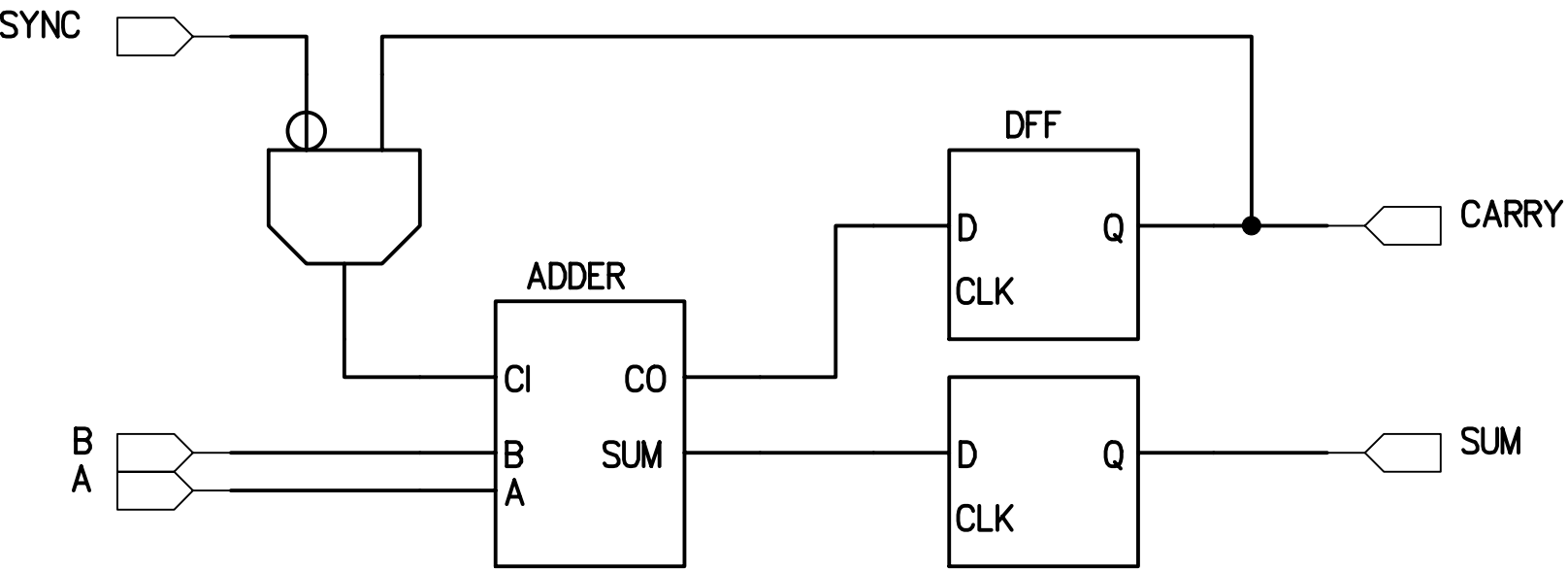carry save serial adder