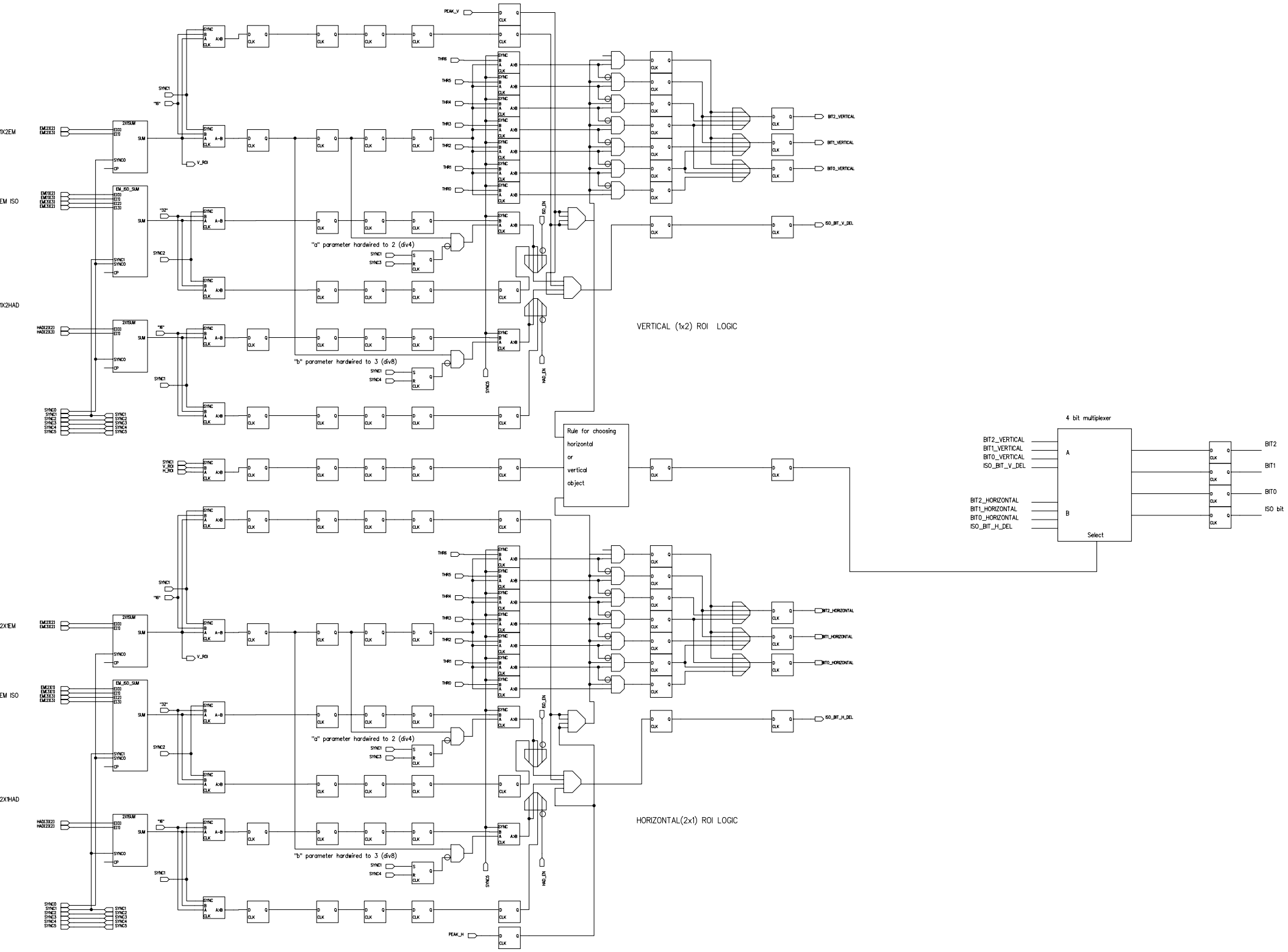
VERTICAL (1x2) ROI LOGIC
HORIZONTAL(2x1) ROI LOGIC
Rule for choosing horizontal or vertical object
4 bit multiplexer
Select
BIT2_VERTICAL
BIT1_VERTICAL
BIT0_VERTICAL
ISO_BIT_V_DEL
BIT2_HORIZONTAL
BIT1_HORIZONTAL
BIT0_HORIZONTAL
ISO_BIT_H_DEL
BIT2
BIT1
BIT0
ISO bit
"a" parameter hardwired to 2 (div4)
"b" parameter hardwired to 3 (div8)
PEAK_V
PEAK_H
ISO_EN
HAD_EN
V_ROI
1X2EM
EM ISO
1X2HAD
2X1EM
2X1HAD