OUTPUT = a0X0 + a1X1 + a2X2 + a3X3

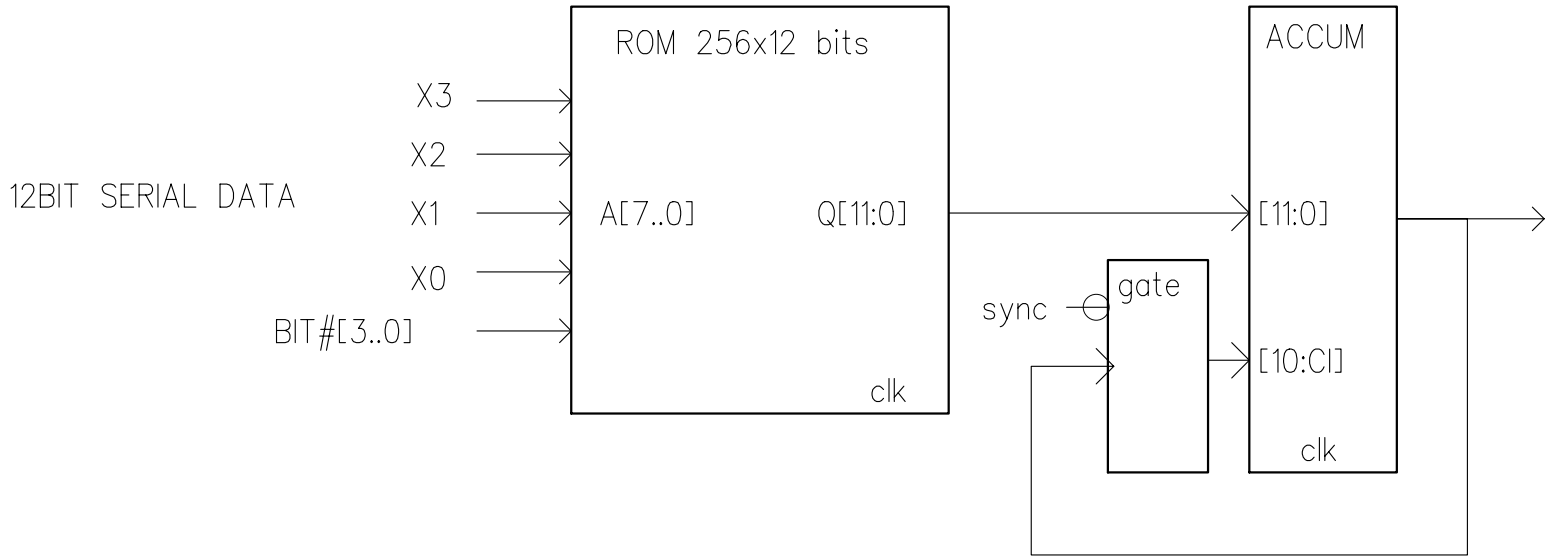

THE ROM STORES ALL POSSIBLE SUMS OF A0 TO A3 FOR THE 12 SERIAL BITS.
THE 12BIT ACCUM OUTPUT IS FEDBACK TO THE INPUT, SHIFTED 1 BIT POSITION.