MINH @ FINISAR.COM

Finisar

Low Cost, Gigabit

Fiber Optic Transmitter/Receiver

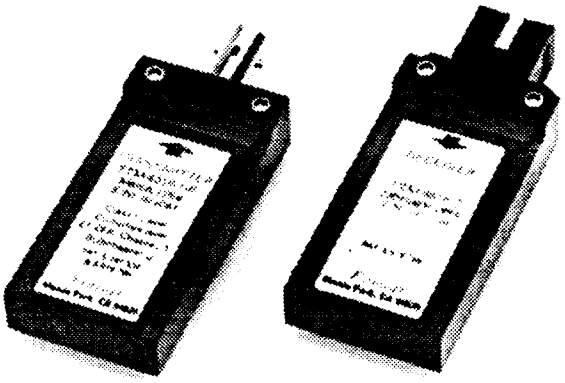

FTM-8510-1 FRM-8510-2

These are the 850 nm gigabit transmitter and receiver modules for multi-mode data links of less than 1 Km in length. For long distance links, 1300 nm and 1550 nm single-mode modules are also available in the same package with the same pin-out.

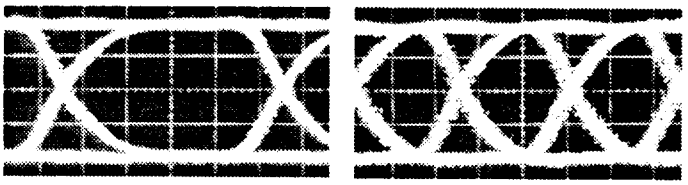

1.0 Gb/s 2.0 Gb/s

Receiver eye patterns from a typical FTM/FRM-8510 link transmitting a 2^7-1 pseudorandom bit sequence.

Also available:

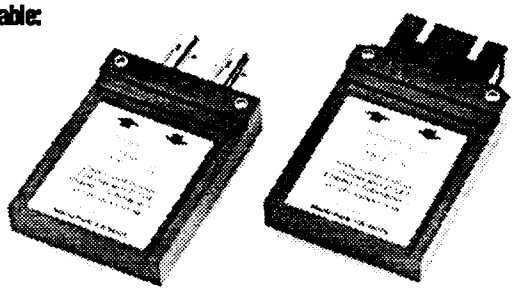

FTR-8510 Integrated transceiver module

The FTM-8510 optical transmitter and FRM-8510 optical receiver are two of Finisar's new second generation data link modules. They are excellent building blocks for highly reliable data links at rates up to 1.5 Gb/s. They are designed for LAN applications where data links are usually less than a kilometer in length. For longer distance links, Finisar offers 1300nm and 1550nm single-mode modules with the same package and pin-out. An integrated transceiver module is also available. These second generation Finisar fiber optic links all feature:

- **High speed – 100 Mb/s to 1.5 Gb/s**
- **Low Cost**
- **Very clean and open eye patterns**
- **Very low jitter – less than 40 ps**
- **Low bit error rate – typically less than 10^{-15}**
- **Low power – <.9 Watt total for Tx+Rx**
- **Single +5Vdc power supply**
- **Built-in test and diagnostics**
- **Optional ANSI open fiber control built-in**
- **SC or ST optical connectors**
- **Class I laser device**
- **Power saving standby mode**

The FTM-8510 accepts as its data input virtually any differential signal (ECL or PECL) that is >.4V P-P. The module is AC coupled and terminated at 50ý. The data output signal is differential, typically .8V P-P.

A unique control and test system is built into all Finisar optical link modules. This system provides real-time control of the optical link as well as status reporting and diagnostics. This control system has a unique interface that enables the user to continuously monitor the status and optical performance of the link. No optical test equipment is required to measure the transmitted and received optical power. The test equipment is built in.

The built-in control/test system has a serial communications port that continuously provides the host system with link status information, optical power levels, drive current, bias voltage, and transmitter temperature. Thus, the host system is able to continually diagnose optical link problems, even while the link is transmitting data. Finisar supplies, at no additional charge, the source code (in ANSI standard C) that enables the user to operate this built-in test and diagnostic system.

Finisar modules have a low power standby mode that enables the host system to be put in a power conserving standby state. When the receiver receives a light pulse, it signals the host to power up.

FTM/FRM-8510 Low Cost Gigabit Optical Transmitter/Receiver

Finisar

Pin-out and specifications

AN 2010

FTM8510 Optical Transmitter

PIN #	DESCRIPTION	SIGNAL TYPE	MIN	TYP	MAX	UNITS	CONNECTION
1	Rx Opt. Power	Analog Input	0.0		Vcc	V	Rx pin 16 or no connect
2	Rx Sys 1	CMOS I/O	See table below for CMOS values				Rx pin 14 or no connect
3	5 VDC ± 5%	Power Supply	4.75	5.00	5.25	V	
4	CS	CMOS Input	All CMOS Inputs/Outputs				Active low (see app. note)
5	OFC Status	CMOS Output		MIN	MAX		See app. note
6	Tx Off	CMOS Input	VinL		1.5	V	Active High (see app. note)
7	Ready	CMOS I/O	VinH	3.5		V	See app. note
8	Reset	CMOS Input	VoL		0.5	V	Active low (see app. note)
9	Ground		VoH	4.5		V	
10	Tx +	ECL (+) Input AC	350		1000	mVpp	AC coupled, 50 ohm Zin
11	Tx -	ECL (-) Input AC	350		1000	mVpp	AC coupled, 50 ohm Zin
12	Ground	System Ground					
13	SO	CMOS Output	See table below for CMOS I/O min/max values				See app. note
14	SI	CMOS Input					See app. note
15	SClk	CMOS Input					See app. note
16	Rx Signal Detect	CMOS Input					Rx pin 17, or ground
17	Rx Sys 2	CMOS I/O					Rx pin 13, or no connect

PARAMETER	SYMBOL	MIN	TYP	MAX	UNITS	NOTES
Supply Current	Icc	70	90	120	mA	Positive temperature coefficient
Input Impedance	Zin		50		ohms	Rin > 100 kohm @ DC
Baud Rate	BR	100		1500	Mbit/s	
Fiber Length		0.1		500	meters	See app. note
Fiber Core Diameter			50		um	See app. note
Avg. Opt. Power	Popt	-1.5	-0.5	0.5	dBm	
Extinction Ratio	ExtR	5	5.5		dB	
Optical Center		770	850	870	nm	
Spectral Width				4	nm	RMS
Output Rise/Fall	tr/tf		350	400	psec	Optical Rise/Fall Time
Operating Temperature		0		70	deg. C	-40 to +85 C available

FRM8510 Optical Receiver

PIN #	DESCRIPTION	SIGNAL TYPE	MIN	TYP	MAX	UNITS	CONNECTION
3	5 VDC Standby	Power Supply	4.75	5.00	5.25	V	
6, 7	Ground						
8	Rx +	ECL (+) Input AC	400		1000	mVpp	50 ohms to DC level
9	Rx -	ECL (-) Input AC	400		1000	mVpp	50 ohms to DC level
10, 11	Ground						
12	5 VDC ± 5%	Power Supply	4.75	5.0	5.25	V	
13	Rx Sys 2	CMOS I/O	See table below for CMOS I/O min/max values				Tx pin 17, or no connect
14	Rx Sys 1	CMOS I/O					Tx pin 2, or no connect
16	Rx Optical Power	Analog Output	0.0		Vcc	V	Tx pin 1, or no connect
17	Rx Signal Detect	CMOS Output	See table above for CMOS values				Tx pin 16, or no connect

Note: Pins 1, 2, 4, 5 and 15 are reserved and require no connection

PARAMETER	SYMBOL	MIN	TYP	MAX	UNITS	NOTES
Supply Current	Icc	70	80	90	mA	Positive temperature coefficient
Standby Current	Iccs		0.5	2	mA	Standby Mode
Output Impedance	Zout		50		ohms	Rin > 100 kohm @ DC
Baud Rate	BR	100		1500	Mbit/s	
Fiber Core Diameter			50		um	See app. note
Rec. Sensitivity	Ptan	-13		2	dBm	BER<1.0E-12, PRBS 2^1
OFC Start	OFCs	-14			dBm	
Optical Input WL		770	850	870	nm	
Optical Return Loss	ORL	12			dB	
Output Rise/Fall	tr/tf		350	400	psec	
Operating Temperature		0		70	deg. C	-40 to +85 C available

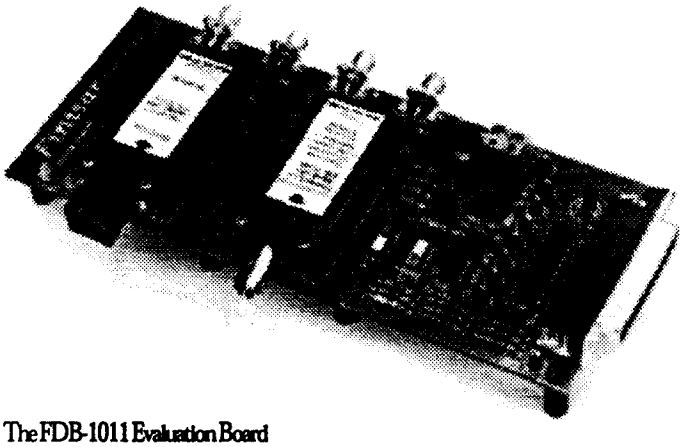

The FDB-1011 Evaluation Board

is supplied with the transmitter and receiver module mounted in a socket, a software disk, and a DB-25 cable. The board only requires +5Vdc and ground. You supply the differential signal through SMA coax connectors. You may display the output of the built-in test and monitoring system by connecting the FDB-1011 to a PC parallel port.

Part numbers

Transmitter module (850 nm)	FTM-8510-X-Y-Z
Receiver module (850 nm)	FRM-8510-X
Transceiver module (850 nm)	FTR-8510-X-Y-Z
Transceiver evaluation board	FDB-1010-8510-X-Y-Z
Simplex evaluation board	FDB-1011-8510-X-Y-Z

X=optical connector (1=ST, 2=SC), Y=ANSI OFC (1=on, 0=off), Z= data rate for OFC (1=1.06 Gb/s and 531 Mb/s, 2=266 Mb/s)

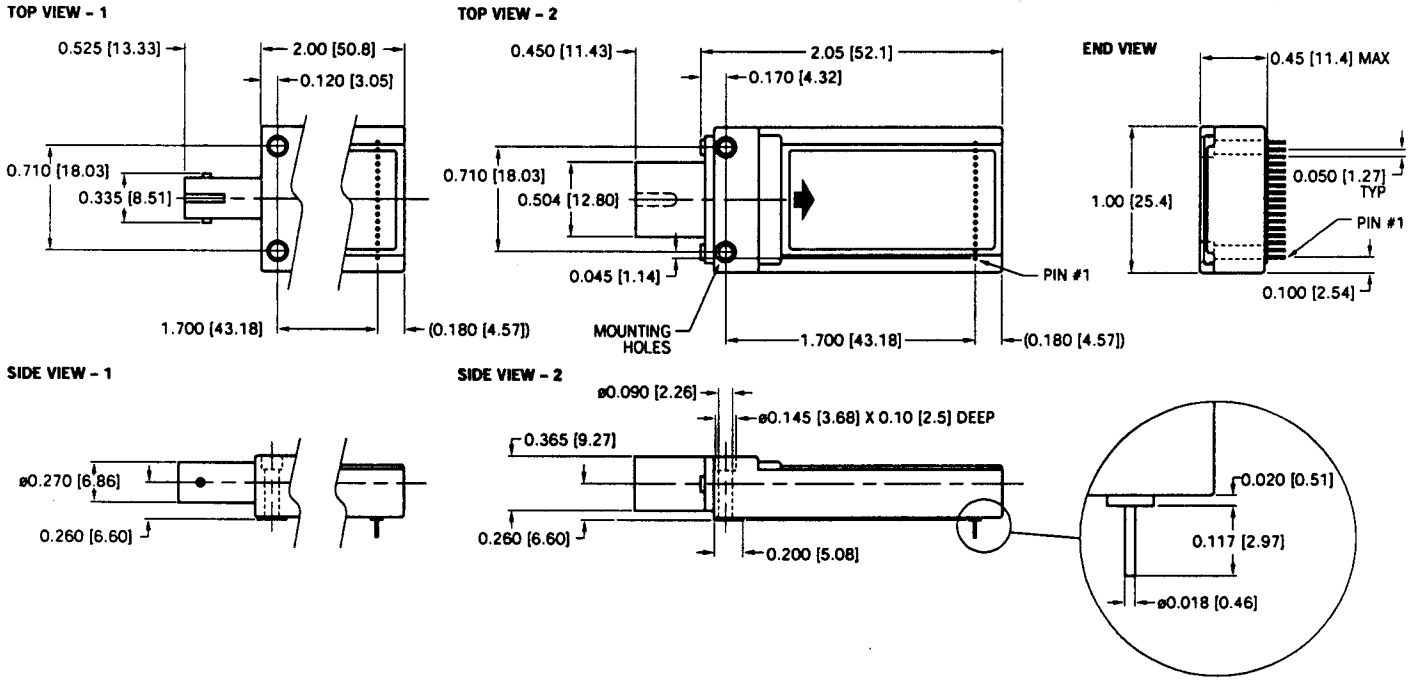

Finisar Corporation • 620B Clyde Ave, Mountain View, CA 94043 • 415-691-4000 Fax:415-691-4010

Pin-out and specifications

AN 2010

FTM8510 Optical Transmitter

PIN #	DESCRIPTION	SIGNAL TYPE	MIN	TYP	MAX	UNITS	CONNECTION
1	Rx Opt. Power	Analog Input	0.0		Vcc	V	Rx pin 16 or no connect
2	Rx Sys 1	CMOS I/O	See table below for CMOS values				Rx pin 14 or no connect
3	5 VDC ± 5%	Power Supply	4.75	5.00	5.25	V	
4	CS	CMOS Input	All CMOS Inputs/Outputs				Active low (see app. note)
5	OFC Status	CMOS Output		MIN	MAX		See app. note
6	Tx Off	CMOS Input	VinL		1.5	V	Active High (see app. note)
7	Ready	CMOS I/O	VinH	3.5		V	See app. note
8	Reset	CMOS Input	VoL		0.5	V	Active low (see app. note)
9	Ground		VoH	4.5		V	
10	Tx +	ECL (+) Input AC	350		1000	mVpp	AC coupled, 50 ohm Zin
11	Tx -	ECL (-) Input AC	350		1000	mVpp	AC coupled, 50 ohm Zin
12	Ground	System Ground					
13	SO	CMOS Output	See table below for CMOS I/O min/max values				See app. note
14	SI	CMOS Input					See app. note
15	SClk	CMOS Input					See app. note
16	Rx Signal Detect	CMOS Input					Rx pin 17, or ground
17	Rx Sys 2	CMOS I/O					Rx pin 13, or no connect

PARAMETER	SYMBOL	MIN	TYP	MAX	UNITS	NOTES
Supply Current	Icc	70	90	120	mA	Positive temperature coefficient
Input Impedance	Zin		50		ohms	Rin > 100 kohm @ DC
Baud Rate	BR	100		1500	Mbit/s	
Fiber Length		0.1		500	meters	See app. note
Fiber Core Diameter			50		um	See app. note
Avg. Opt. Power	Popt	-1.5	-0.5	0.5	dBm	
Extinction Ratio	ExtR	5	5.5		dB	
Optical Center		770	850	870	nm	
Spectral Width				4	nm	RMS
Output Rise/Fall	tr/tf		350	400	psec	Optical Rise/Fall Time
Operating Temperature		0		70	deg. C	-40 to +85 C available

FRM8510 Optical Receiver

PIN #	DESCRIPTION	SIGNAL TYPE	MIN	TYP	MAX	UNITS	CONNECTION
3	5 VDC Standby	Power Supply	4.75	5.00	5.25	V	
6, 7	Ground						
8	Rx +	ECL (+) Input AC	400		1000	mVpp	50 ohms to DC level
9	Rx -	ECL (-) Input AC	400		1000	mVpp	50 ohms to DC level
10, 11	Ground						
12	5 VDC ± 5%	Power Supply	4.75	5.0	5.25	V	
13	Rx Sys 2	CMOS I/O	See table below for CMOS I/O min/max values				Tx pin 17, or no connect
14	Rx Sys 1	CMOS I/O					Tx pin 2, or no connect
16	Rx Optical Power	Analog Output	0.0		Vcc	V	Tx pin 1, or no connect
17	Rx Signal Detect	CMOS Output	See table above for CMOS values				Tx pin 16, or no connect
Note: Pins 1, 2, 4, 5 and 15 are reserved and require no connection							

PARAMETER	SYMBOL	MIN	TYP	MAX	UNITS	NOTES
Supply Current	Icc	70	80	90	mA	Positive temperature coefficient
Standby Current	Iccs		0.5	2	mA	Standby Mode
Output Impedance	Zout		50		ohms	Rin > 100 kohm @ DC
Baud Rate	BR	100		1500	Mbit/s	
Fiber Core Diameter			50		um	See app. note
Rec. Sensitivity	Ptan	-13		2	dBm	BER<1.0E-12, PRBS 2^7-1
OFC Start	OFCs	-14			dBm	
Optical Input WL		770	850	870	nm	
Optical Return Loss	ORL	12			dB	
Output Rise/Fall	tr/tf		350	400	psec	
Operating Temperature		0		70	deg. C	-40 to +85 C available