# BLS-to-ADF Transition System

Existing and proposed calorimeter trigger rack layouts. The color code shows how the calorimeter trigger inputs will be reassigned from the existing trigger crates to the new ADF crates.

University of Illinois at Chicago

# Patch Panel

**Paddle Card**

2 Pleated Foil Cables input from the Patch Panel Card

ERNI connector output to the ADF backplane

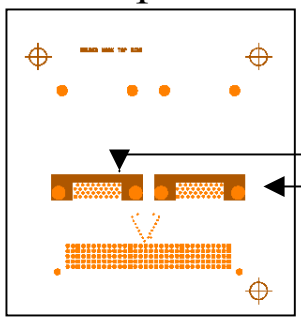

**3M Pleated Foil Cables**

**Patch Panel Card** (2 per Patch Panel)

16 BLS inputs

2 Pleated Foil Cables output to the Paddle Card)

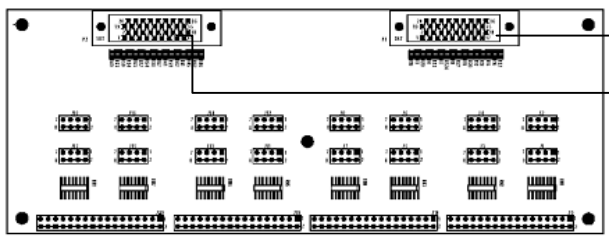

Design made by John Foglesong



University of Illinois at Chicago

# Current BLS Cables Layout

- How the BLS cables are set.

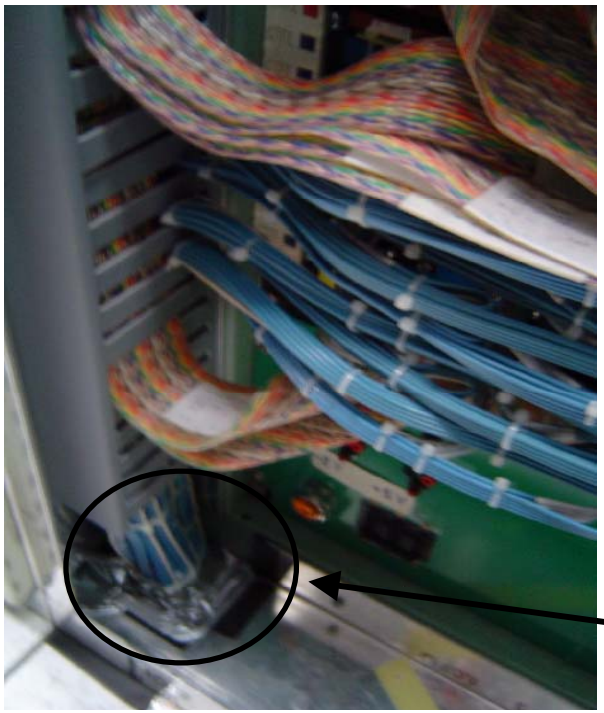

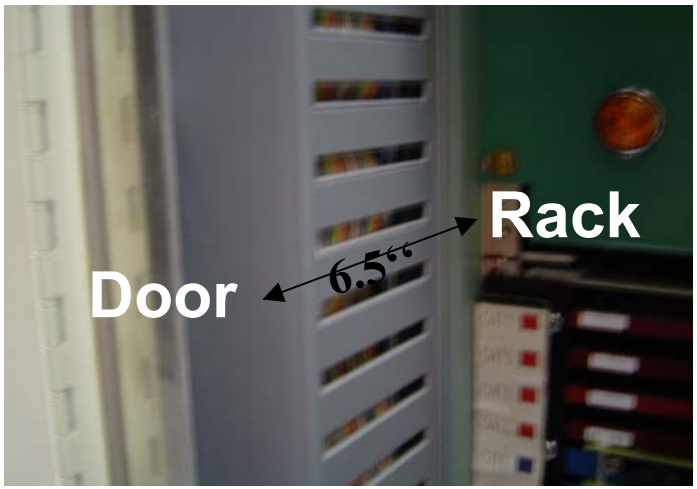

**We decided to do not move the cables**



University of Illinois at Chicago

# PPC layout Design

- Patch Panel Card shift 5’’ out to the rack to keep the cables coming from the front.

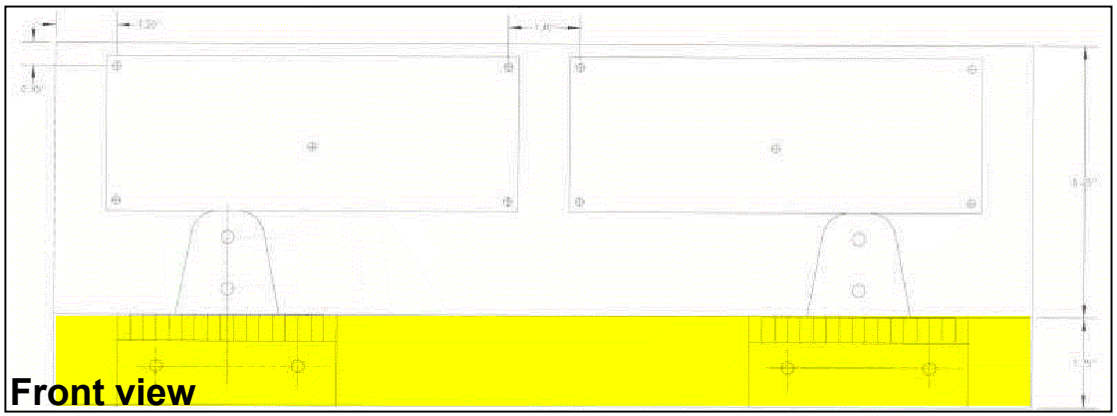


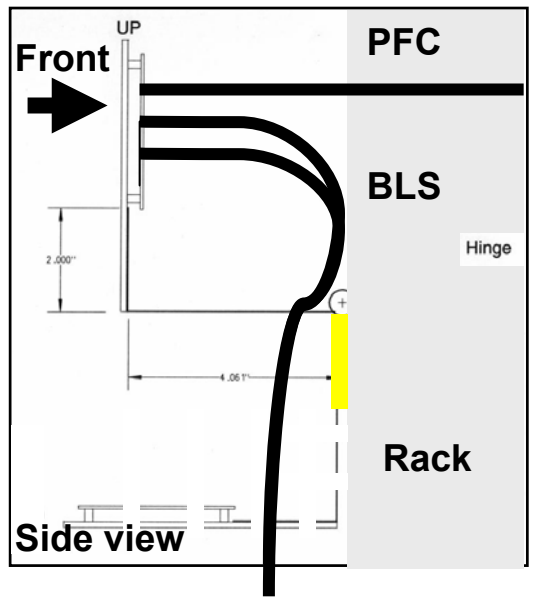


by John Foglesong

# BLS Cables layout

We are looking for the best Patch Panel location considering we need enough space to feet the ADF crates on racks M104 M106 M109 M111 and also TAB/GAB on crate M107 and Control on rack M108. We estimate around 17U

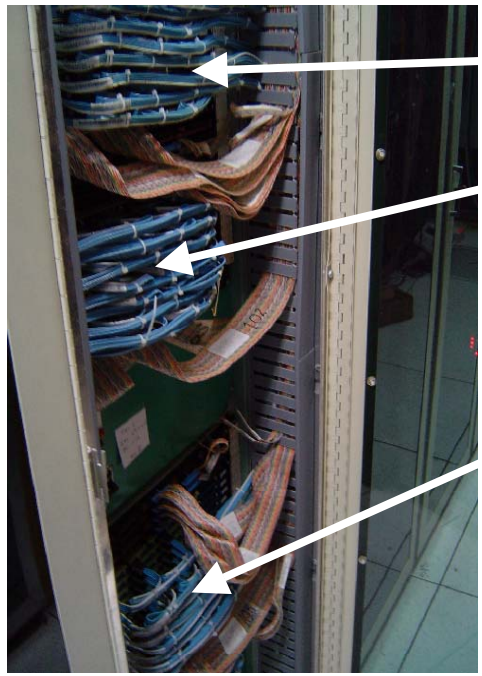

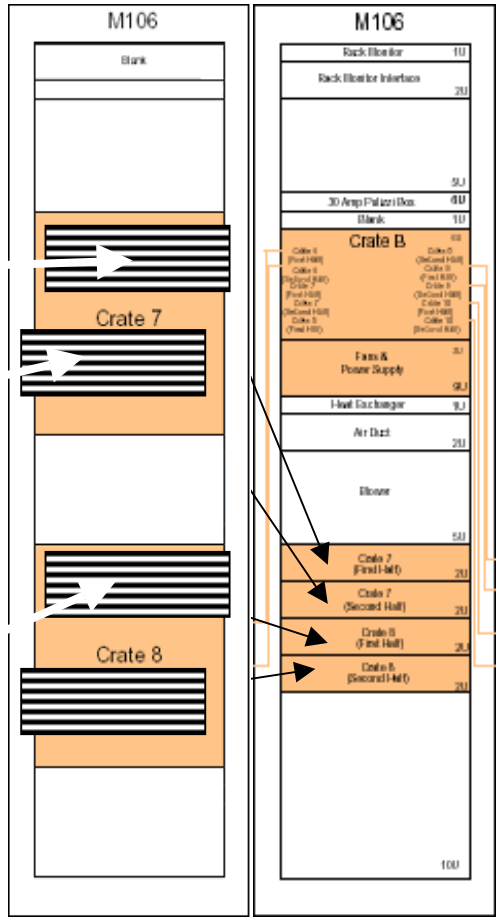




University of Illinois at Chicago

# Mock-up

We reproduce the current BLS cable layout for 128 BLS cables to test the design and to optimize the procedure to connect the cables

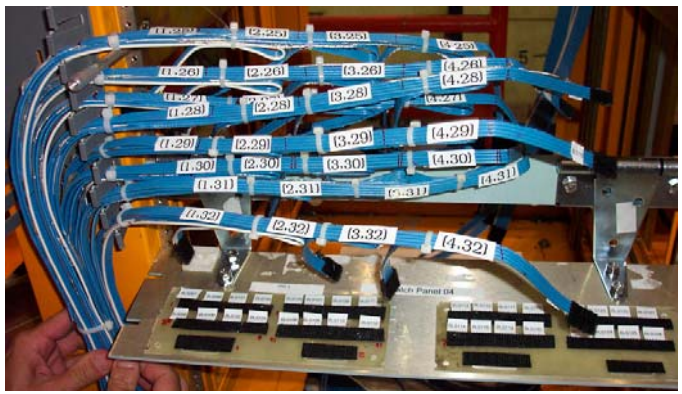


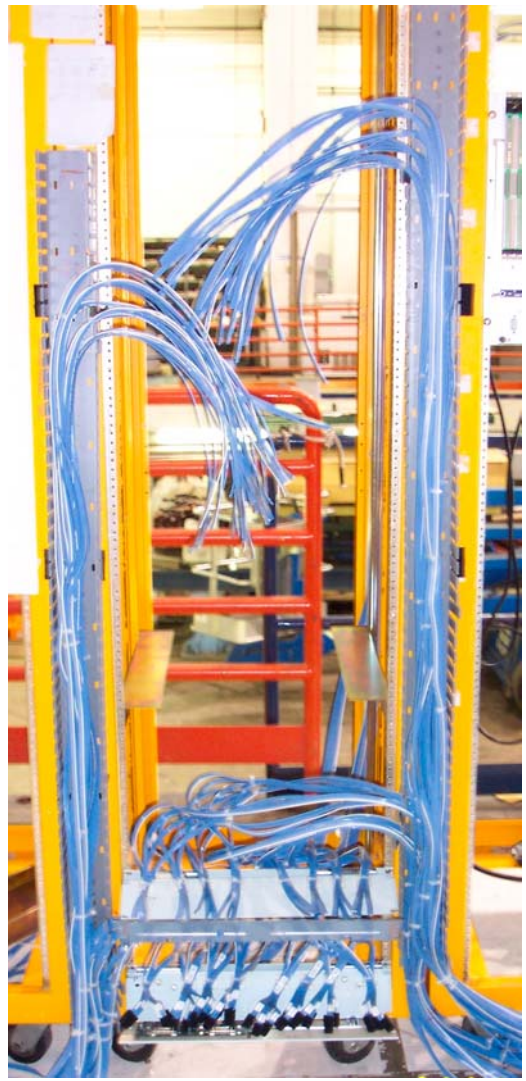



University of Illinois at Chicago

# Mock-up

32 BLS cables rearranged
For the bottom Patch Panel
Crate.

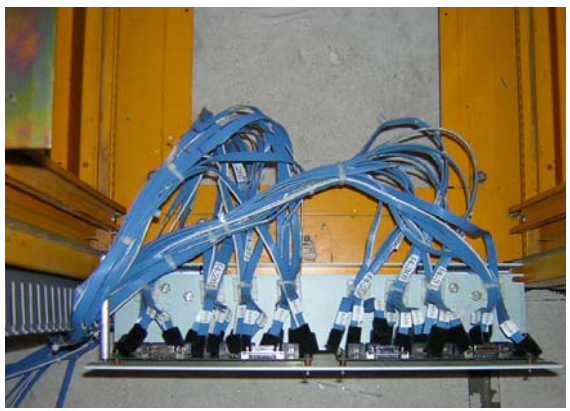

University of Illinois at Chicago

# Signal and Impedance Matching Tests

A fast pulse was sent trough a BLS spare cable, Patch Panel Card, Pleated Foil Cable and Paddle Card.

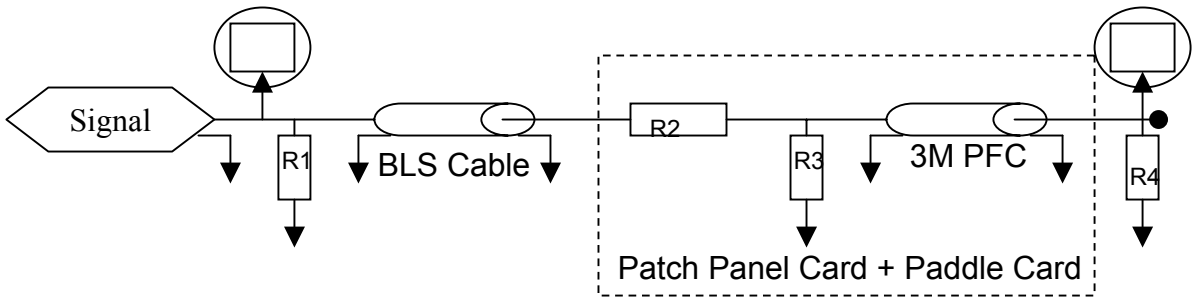


BLS Cable Zo ~ 80 Ω
3M Pleated Foil Cable Zo = 125-135 Ω
R1 = 71 – 73 Ω
R2 = 0
R3 = 241 – 243 Ω
R4 = 133 – 135 Ω



University of Illinois at Chicago

# Signal test

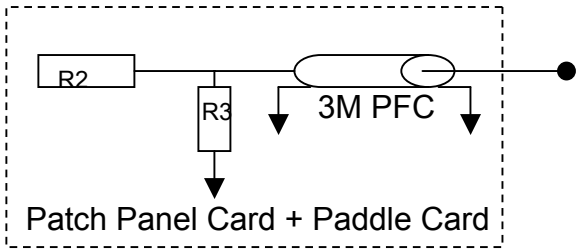


Today
R2 = 0

R3 = 500 Ohm if we terminate the

Pick-Off pins

R2

R3

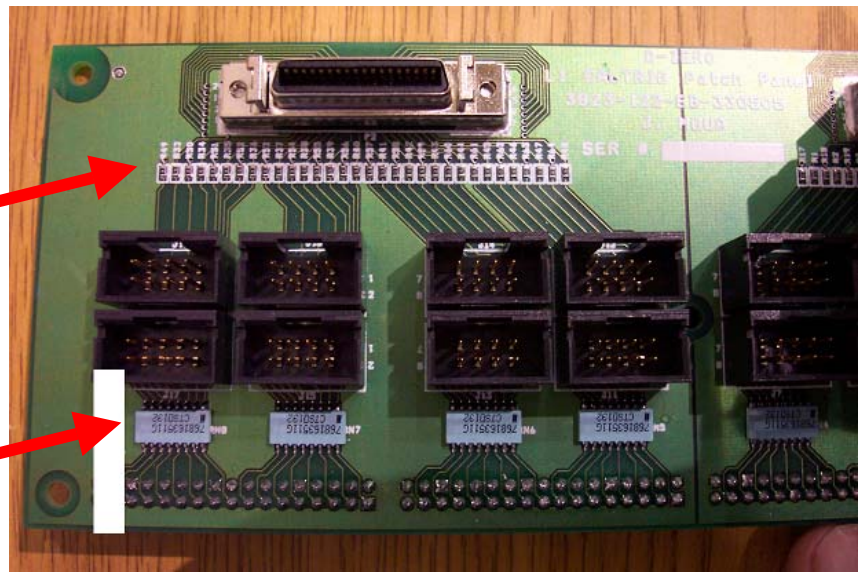

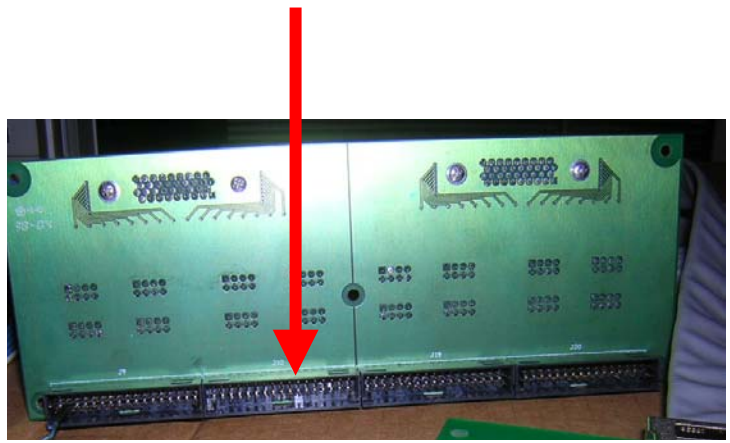



University of Illinois at Chicago

# Signal Test

Connections:

BLS Cable, Patch Panel Card,

Pleated Foil Cable, Paddle Card

# Signal Test

- Connections:

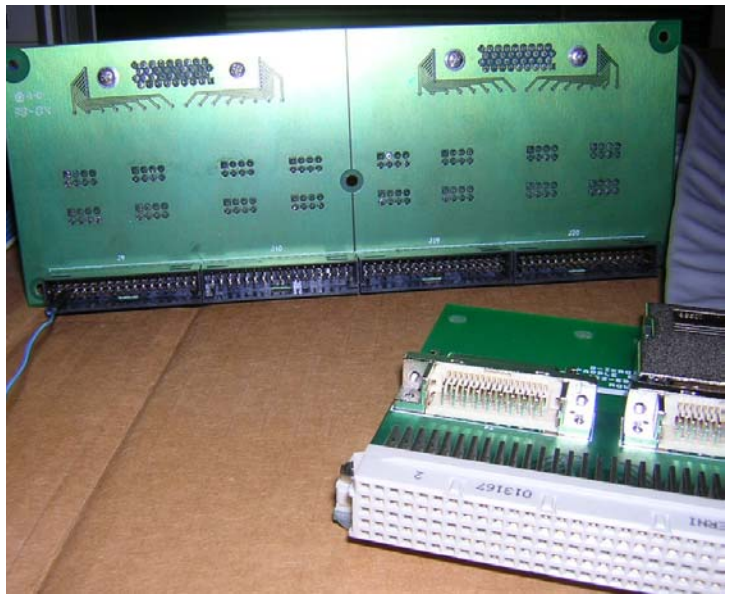

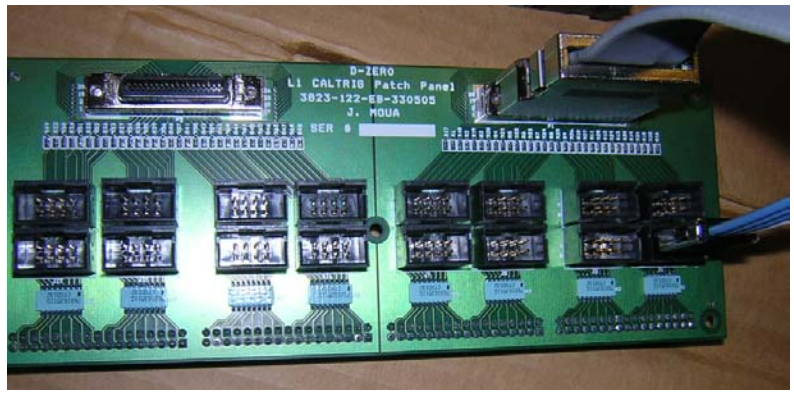




University of Illinois at Chicago

# Signal Test

White: Input to the BLS cables signal

Red: Out put of the Paddle Card.

Reflection on the BLS Cable, PFC Interface.

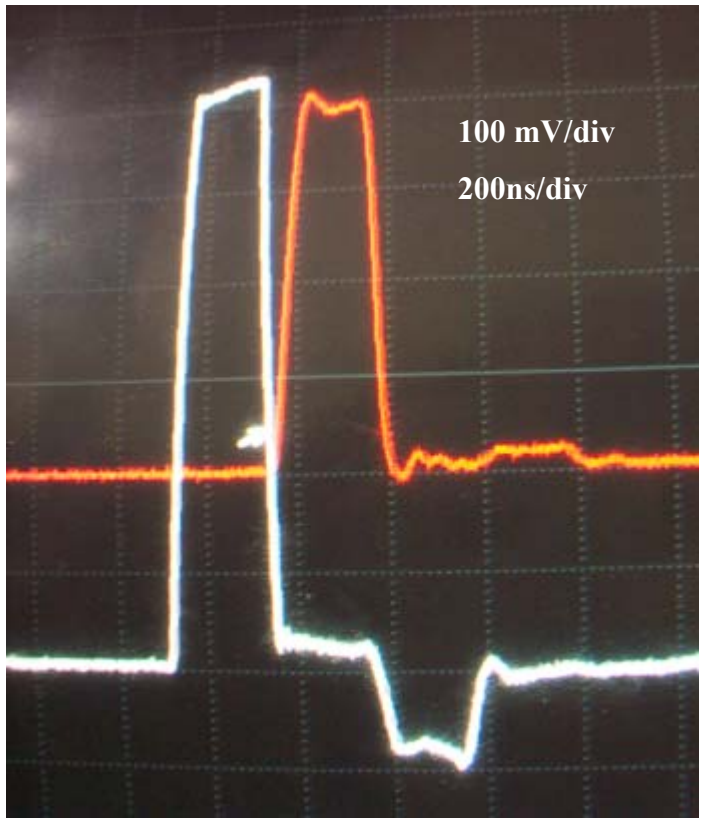


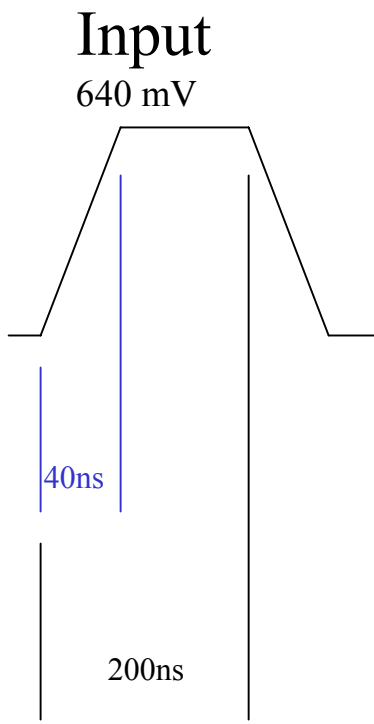




University of Illinois at Chicago

# Signal Test

Same

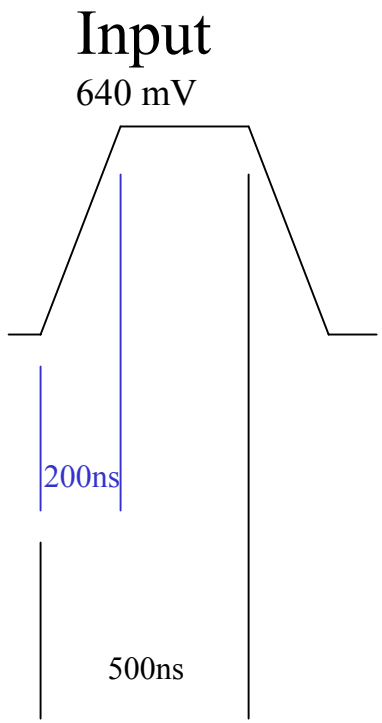

# Signal Test

Using

R3 ~ 242 Ω

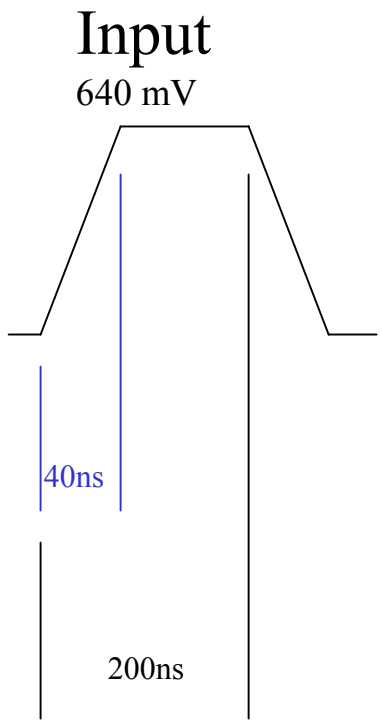

# Signal Test

Same

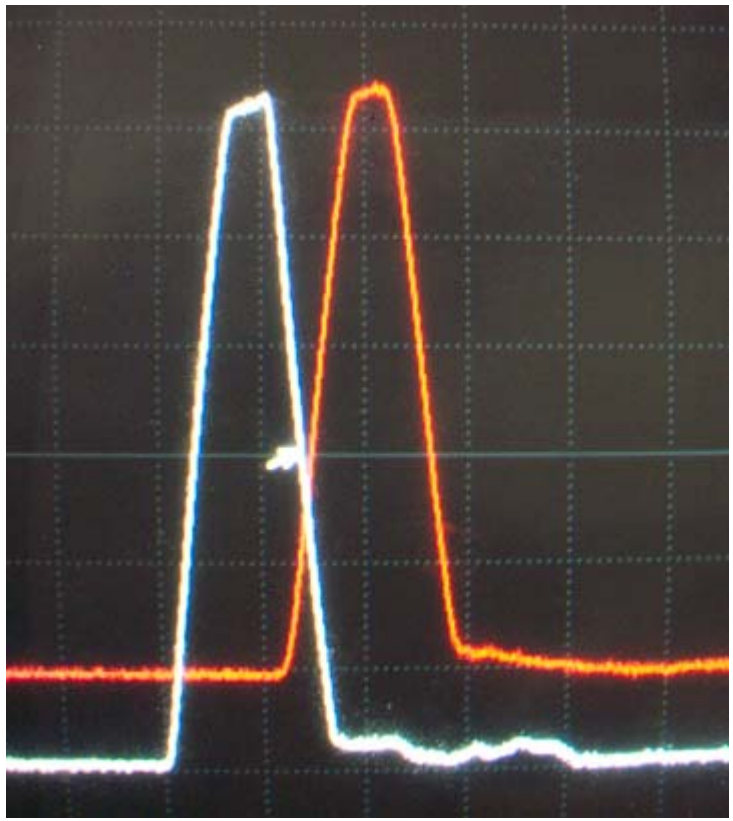

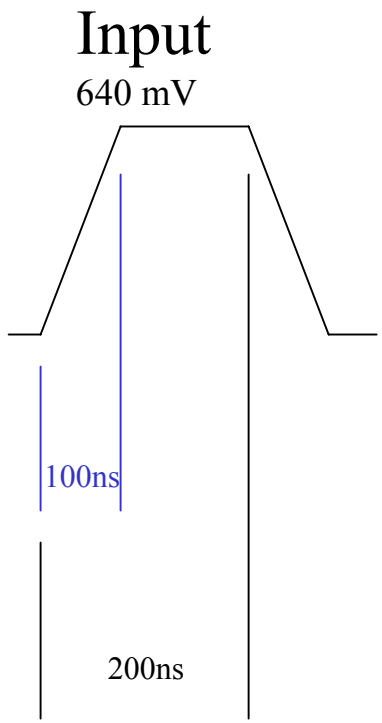




University of Illinois at Chicago

# Signal Test

Same

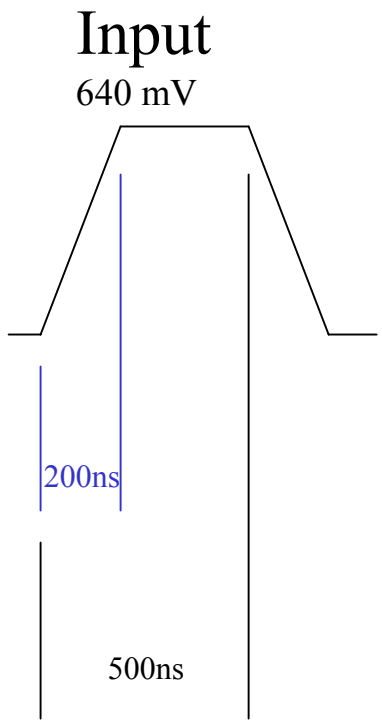

# Summary

- Mock-up
  - The cable flow worked.
  - A procedure to handle the cables is being writing down.
- Signal integrity coming out of the Patch Panel
  - We still have to measure the attenuation for 1 to 20 MHz