Silicon Track Trigger shift tutorial

Lars Sonnenschein

Boston University

- How does the STT work
- What is relevant for the shifter
- Trouble shooting

- How does the STT work

DØ Run 2 detector

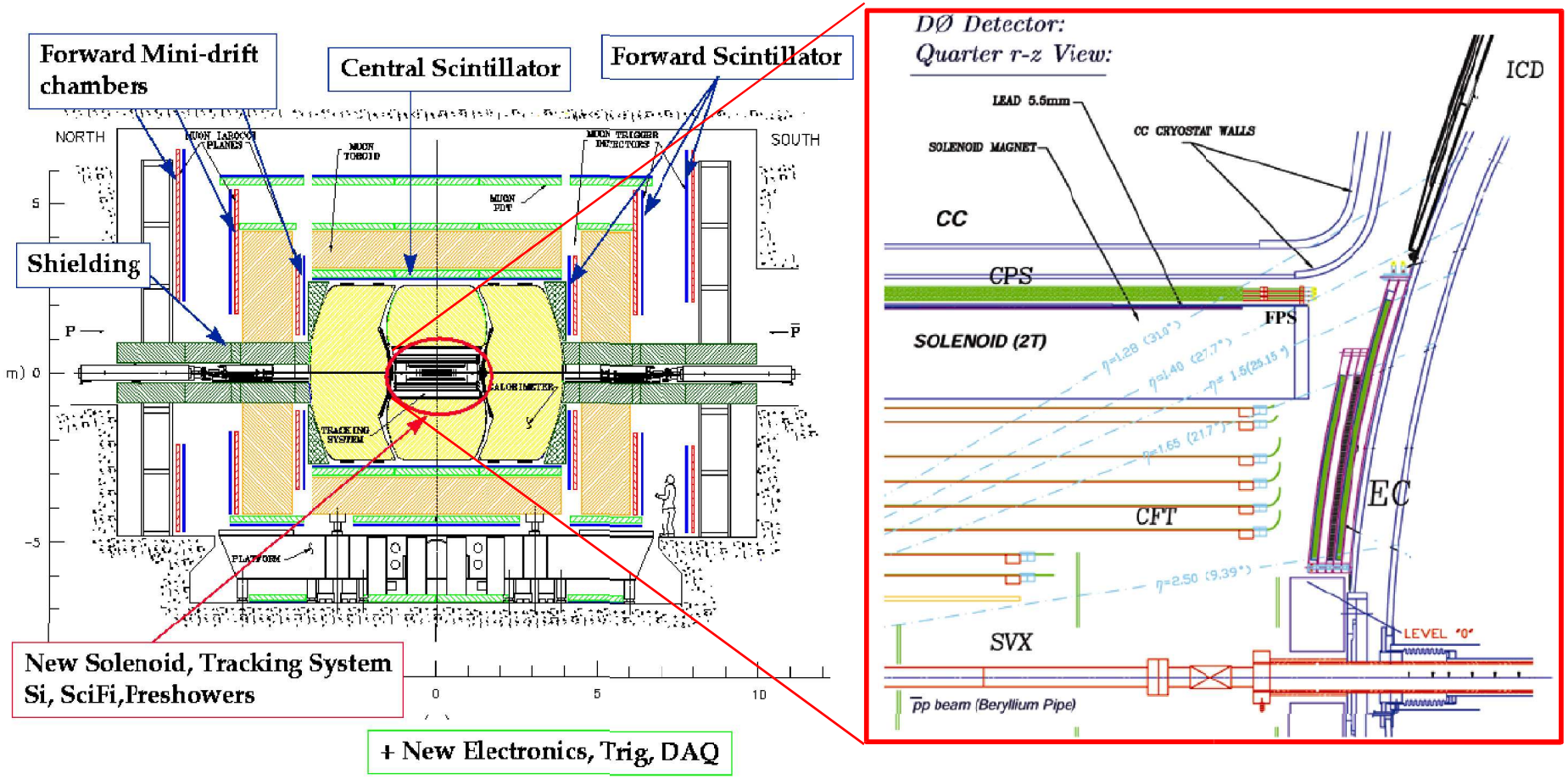

Central Fiber Tracker

- Scintillating fibers
- Up to $|\eta| = 1.7$
- 20 cm $< r <$ 51 cm
- 8 double layers
- 77 000 channels

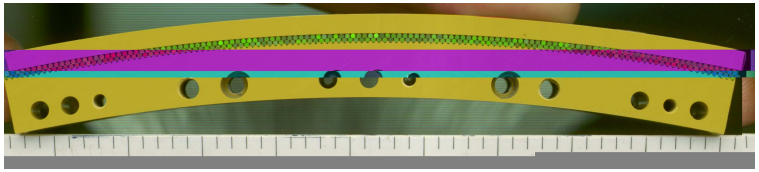

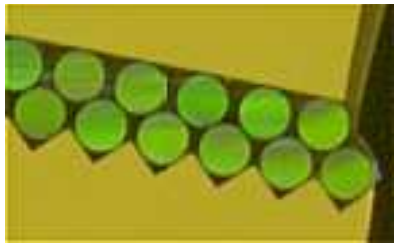

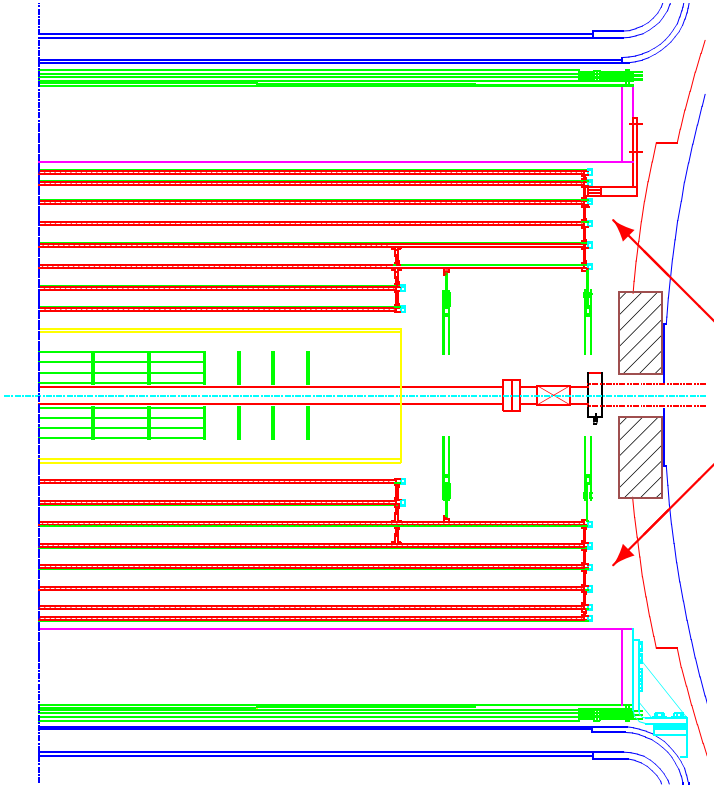

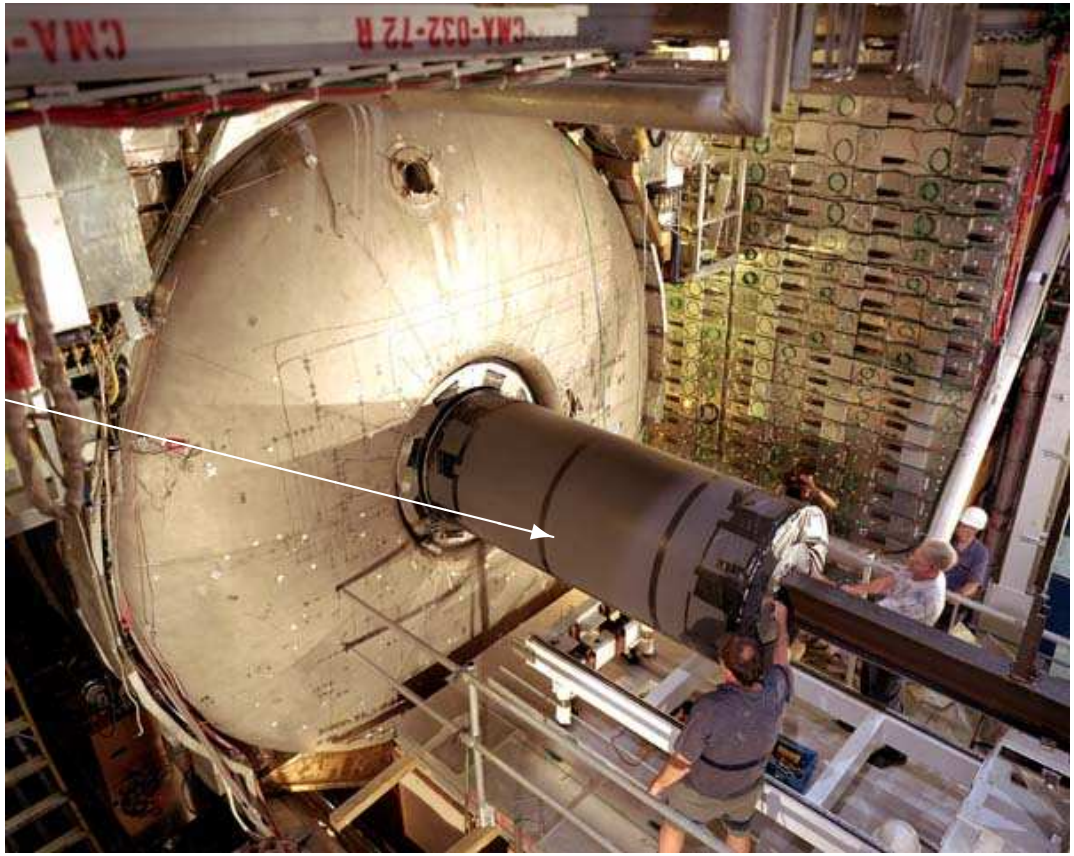

Silicon Microstrip Detector

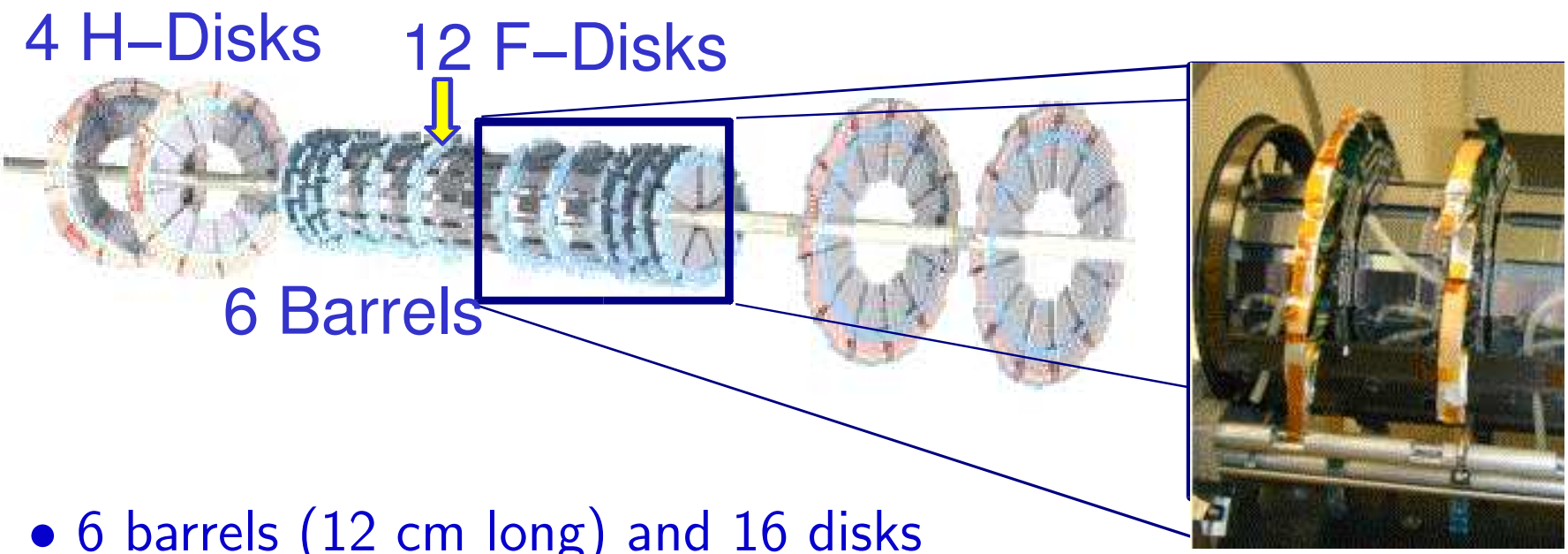

- 6 barrels (12 cm long) and 16 disks
- 793 000 channels of electronics

  (112 000 axial channels)
- SMT hit resolution $\simeq 10\ \mu$m

DØ Trigger system

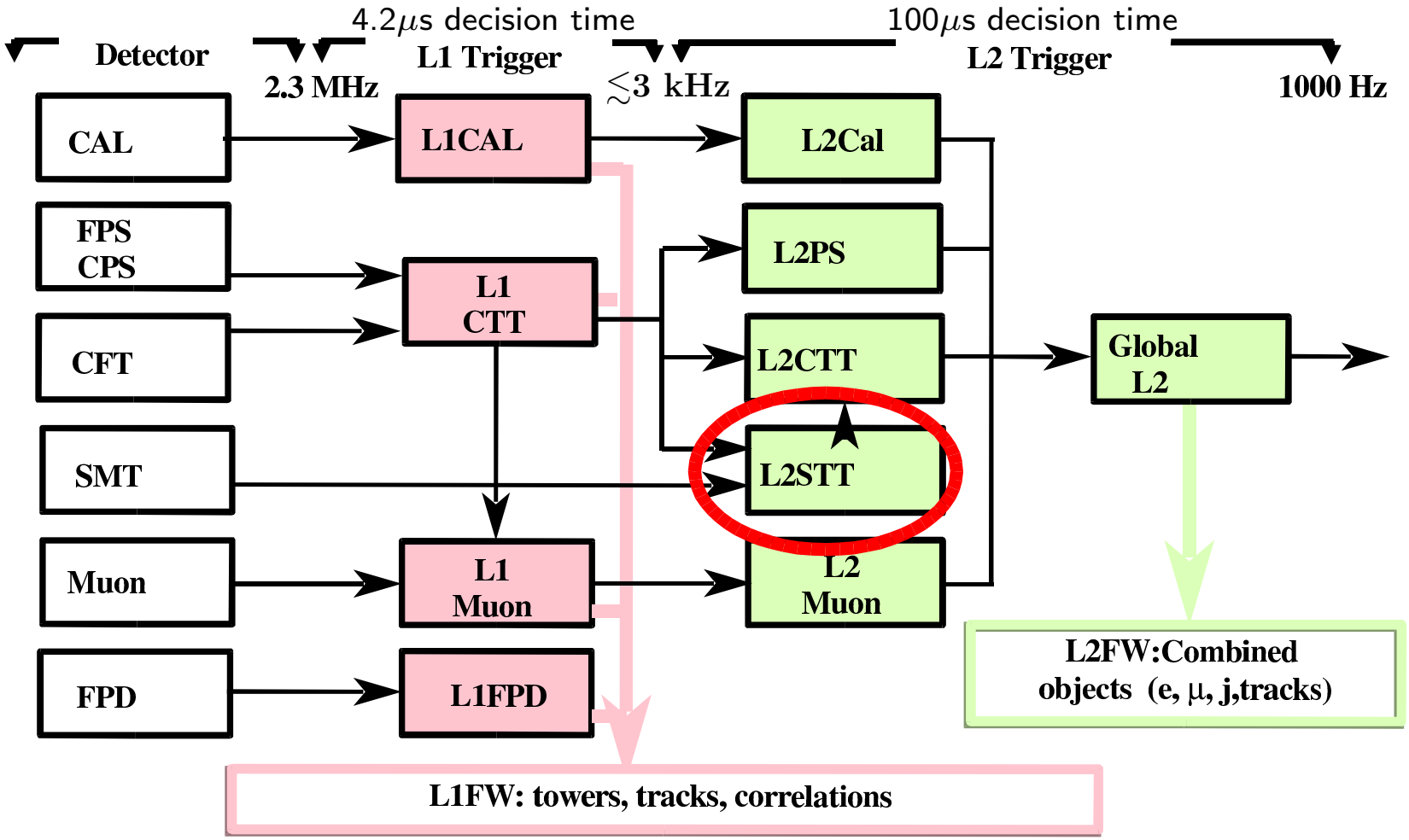

The idea

Need to make
very fast decisions!

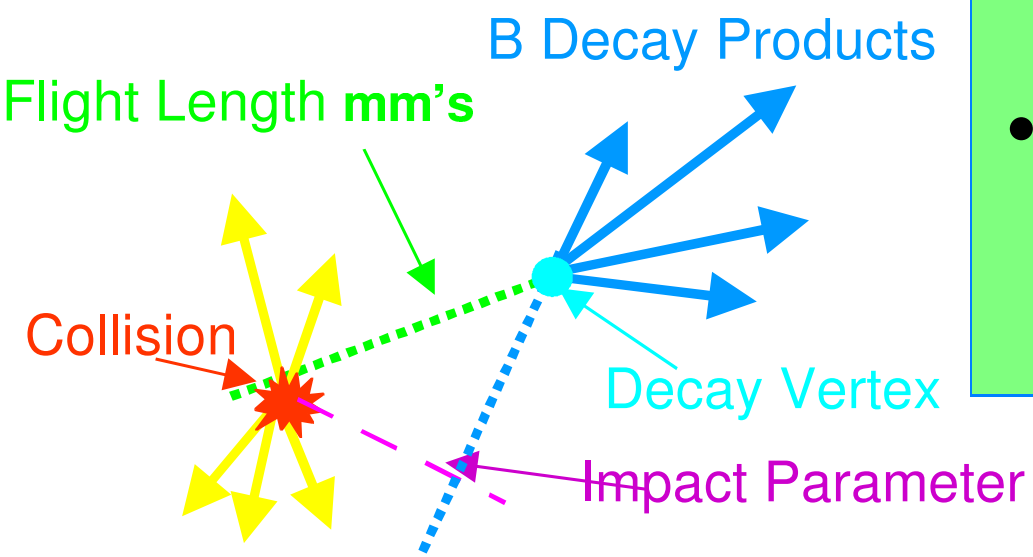

- b quarks are key in many areas:
  - B physics
  - top quark physics ($t \to Wb$)
  - Higgs Physics ($ZH \to \nu\bar{\nu}b\bar{b}$)
- B hadrons have finite lifetime
  - travel mm's before decay
  - $\Rightarrow$ displaced tracks
- Trigger on displaced tracks
  - using SMT precision
  - IP resolution 55 μm @ high $p_\perp$
    (Including 35 μm from beamspot)

STT Conceptual Schematic

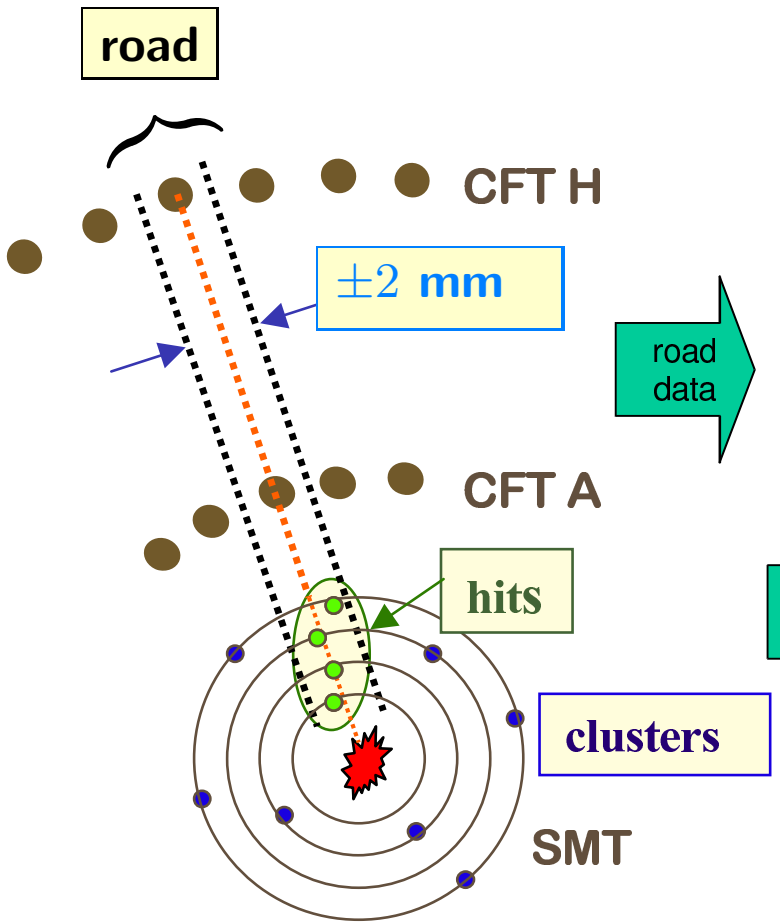

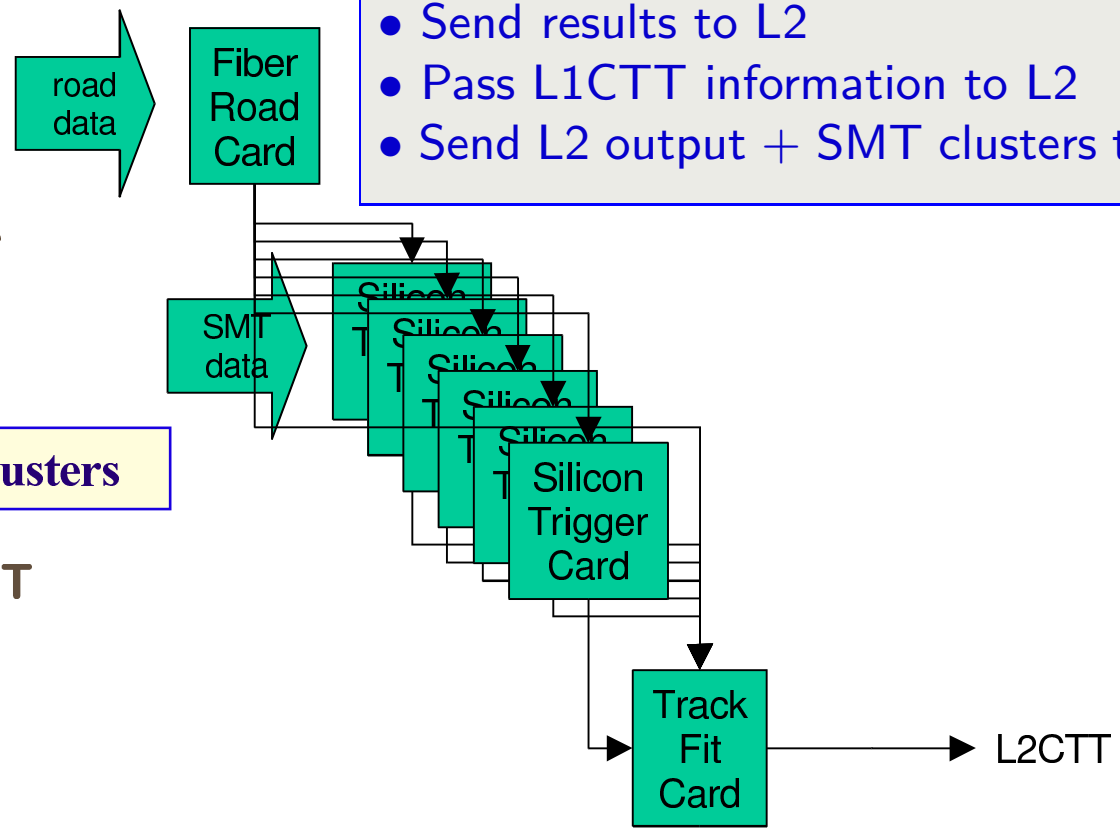

- L1CTT ⇒ tracks in CFT
  - Define road in SMT
- Select axial SMT hits in roads
- Fit trajectory to L1CTT+SMT hits
  - Measure $p_\perp$, IP and azimuth ϕ
- Send results to L2
- Pass L1CTT information to L2
- Send L2 output + SMT clusters to L3

STT Crate Layout

6 identical 60° sector crates each containing:

- 1 Fiber Road Card
  - sync with DØ
  - L1CTT inputs
- 9 Silicon Trigger Cards
  - SMT clustering
  - Coarse cluster - road match
- 2 Track Fit Cards
  - Final cluster selection
  - Track fitting

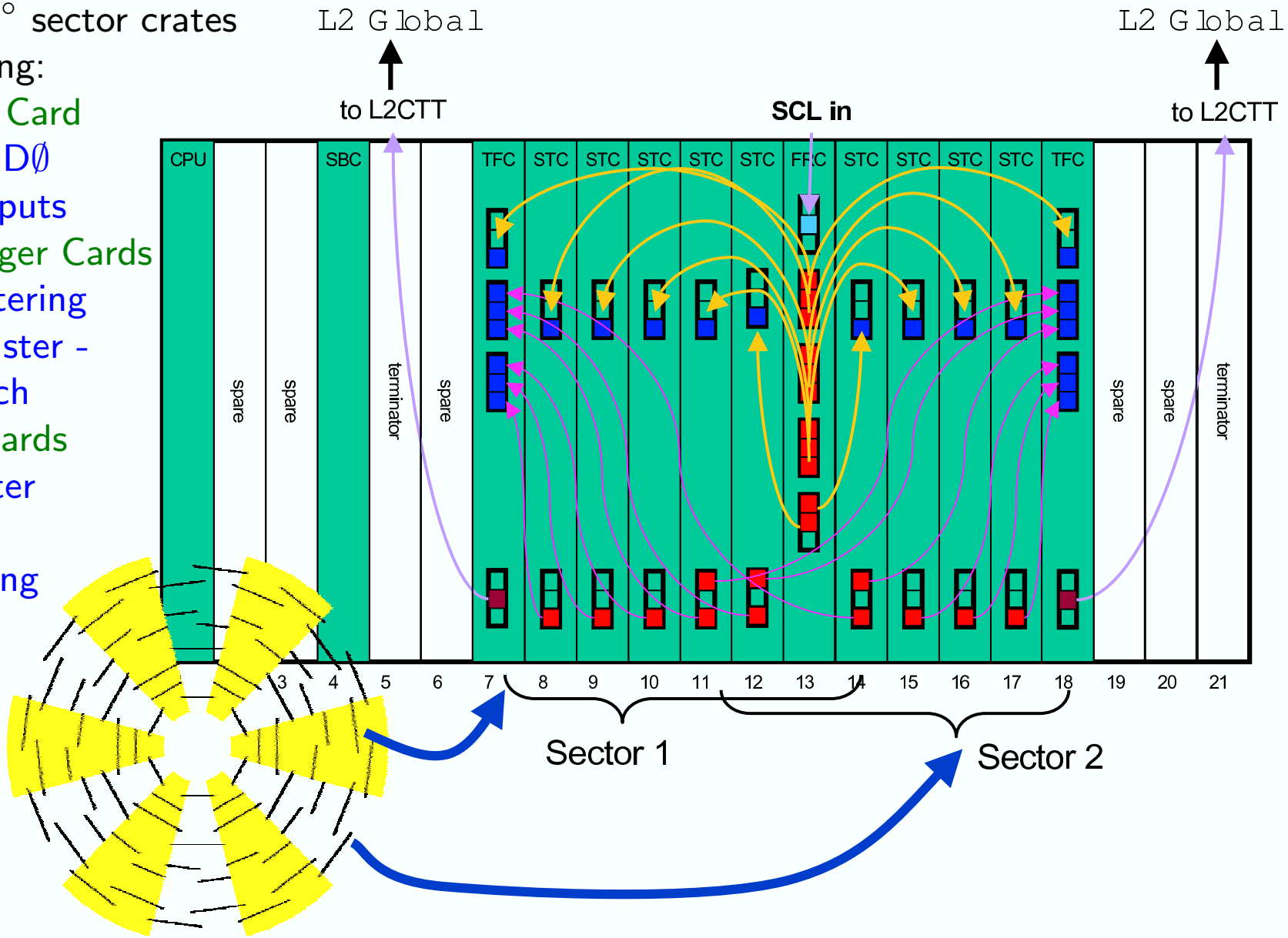

All six 60° sector crates in MCH2

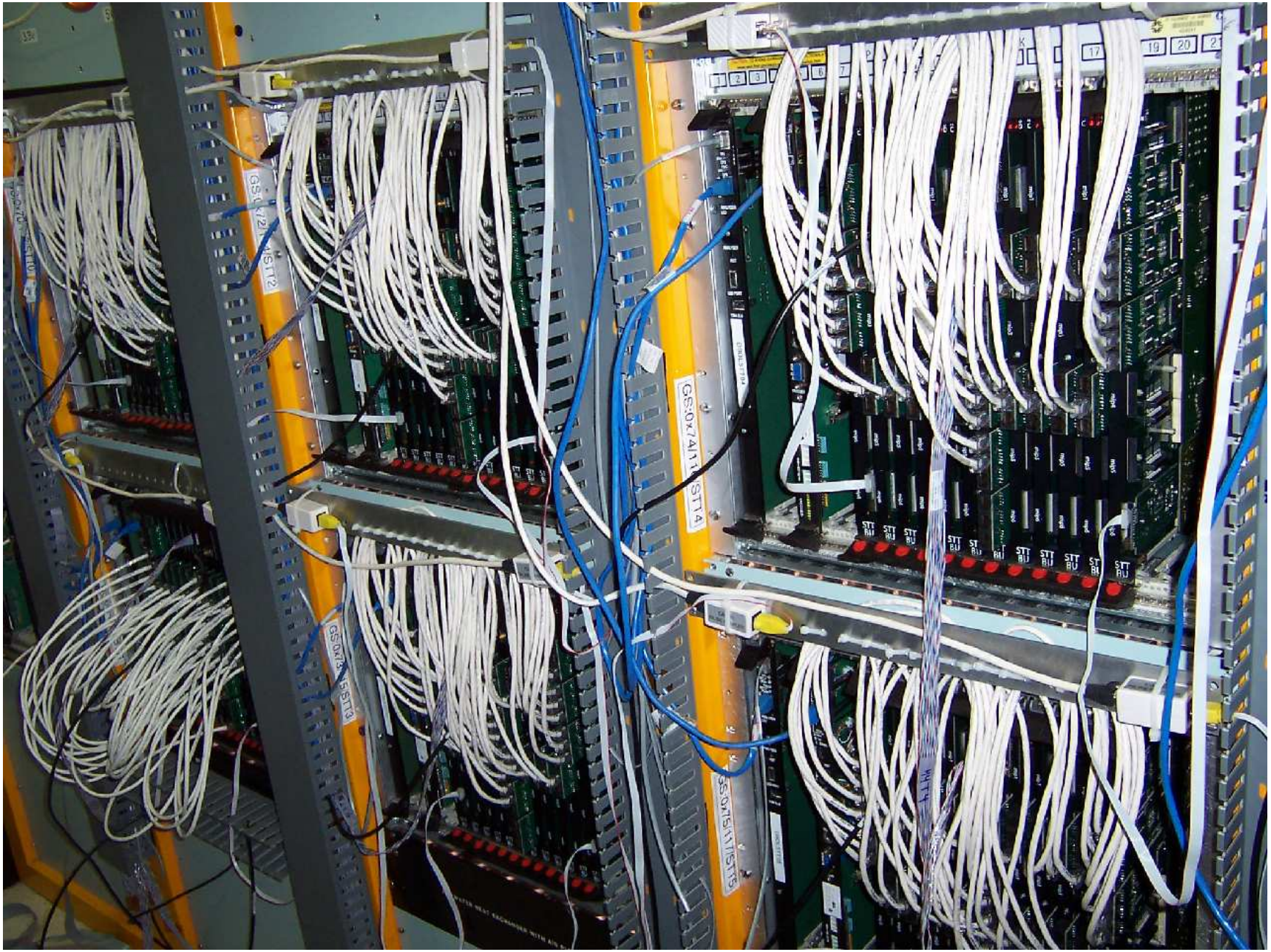

STT mother- and daughterboards

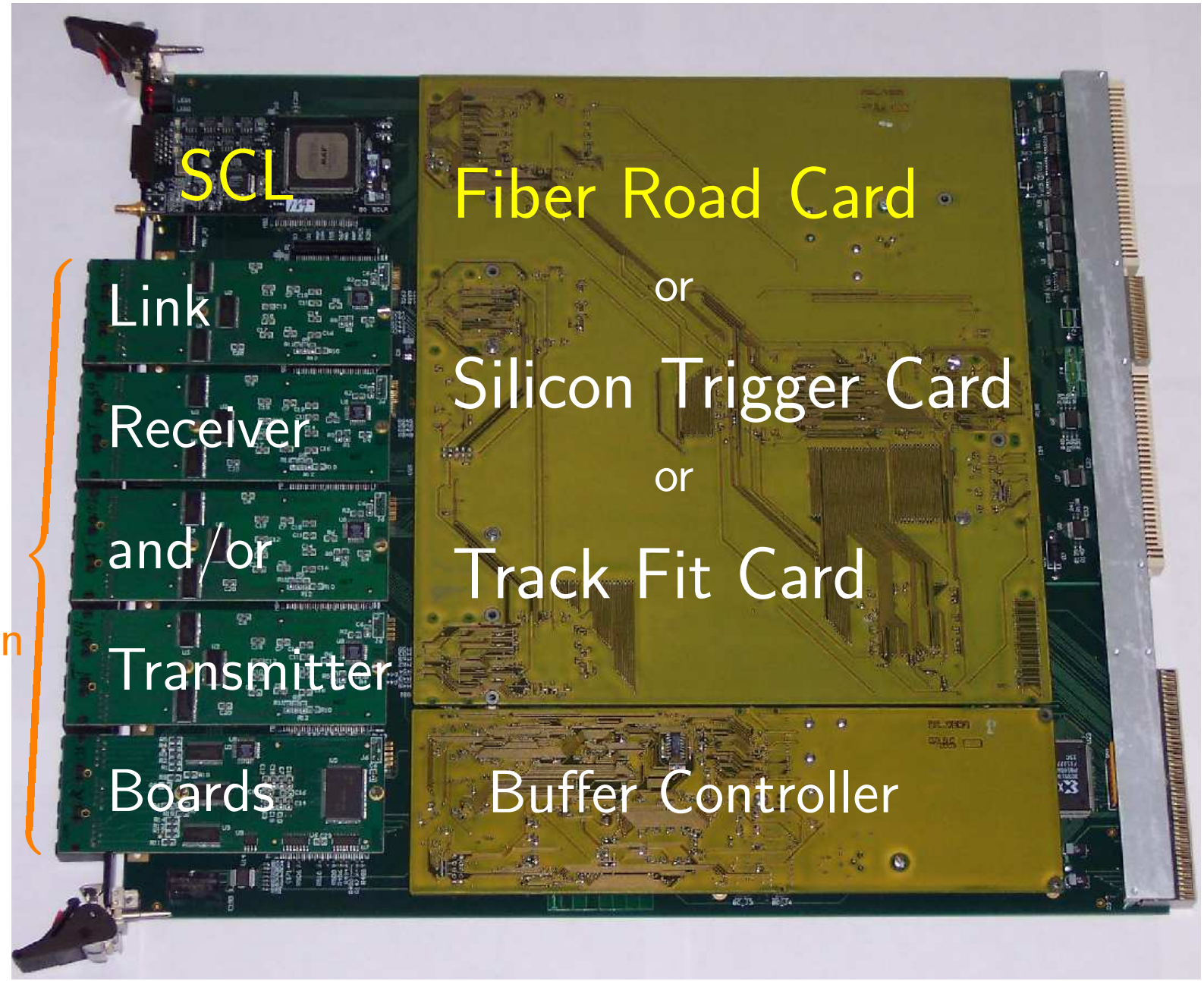

Serial board links for inter-communication

Motherboard (MB) schematic

9Ux400mm VME64x compatible

3 x 33MHz PCI busses for onboard communications

Data communicated between cards via point-to-point links (LVDS) Link Transmitter and Receiver Cards

Control signals sent over backplane using dedicated lines

VME bus used for Level 3 Readout and initialization/monitoring

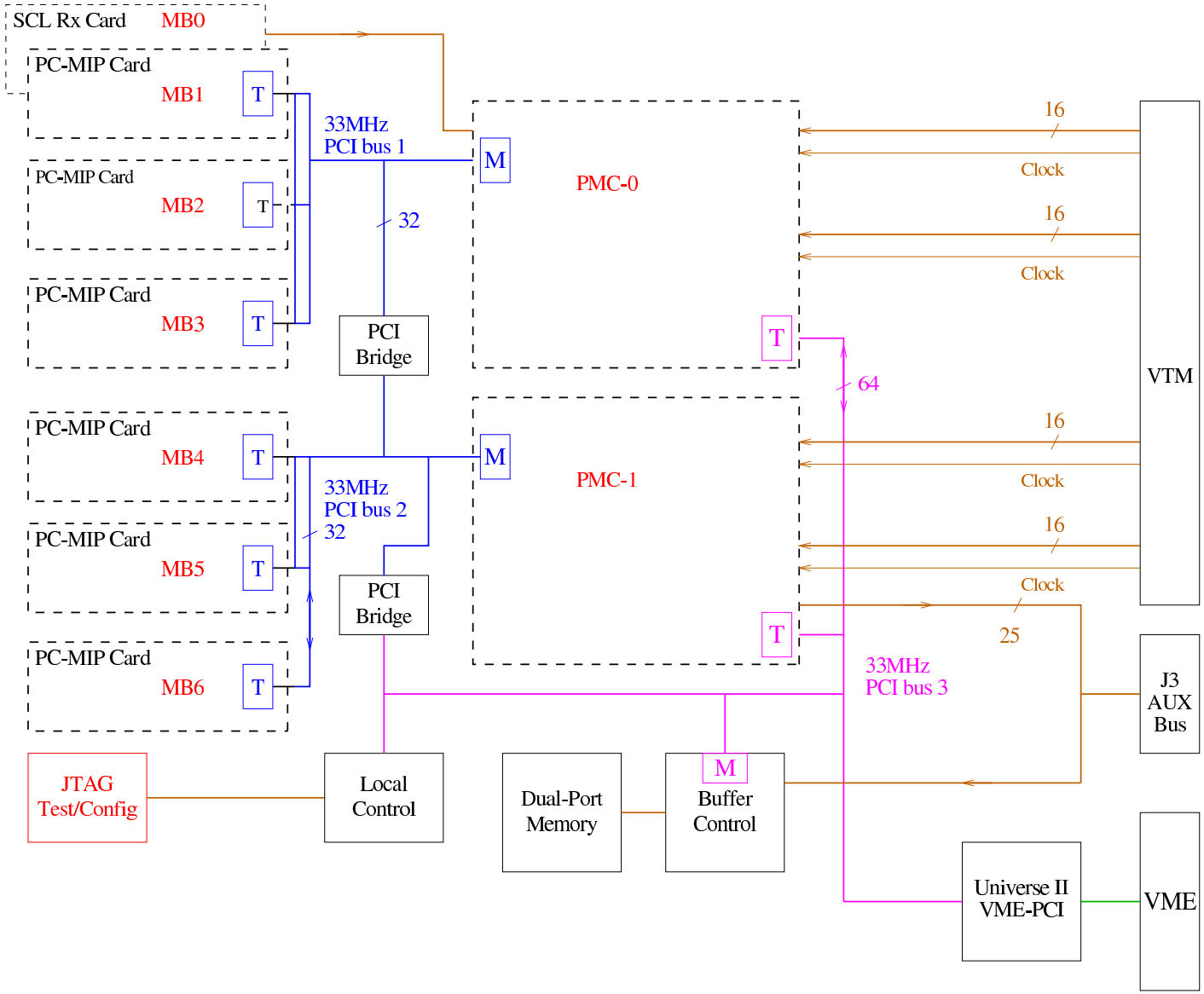

Fiber Road Card (FRC) schematic

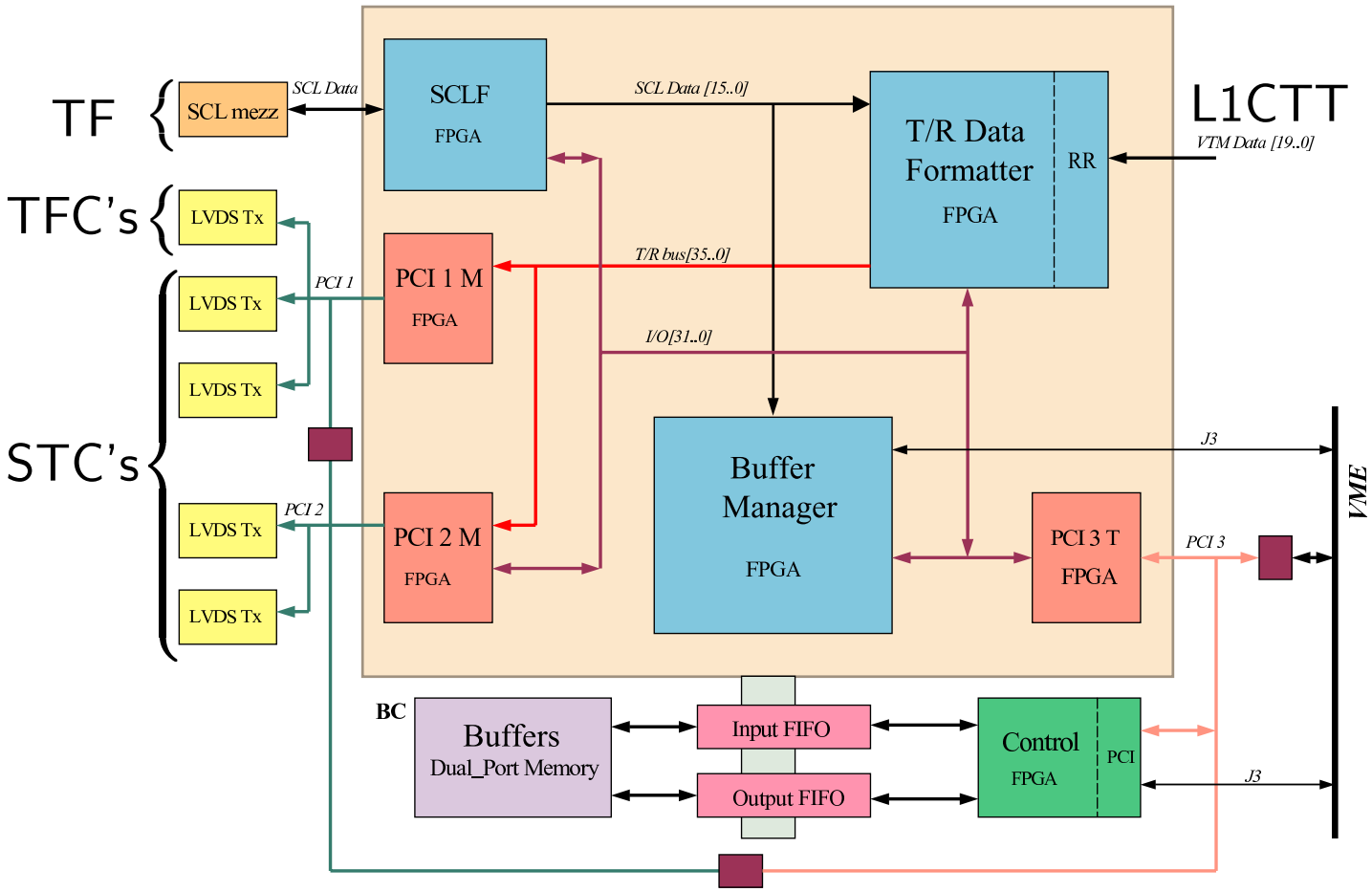

Receives tracks from L1 Central Track Trigger

Communicates with trigger framework (TF) via SCL receiver card

Transmits tracks and trigger info to other cards

Manages L3 buffering and readout via Buffer Controller (BC) daughter cards on each motherboard

FRC document: `http://www.nevis.columbia.edu/~evans/stt/frc/frc.pdf` (as of Feb. 14 2000)

Silicon Trigger Card (STC) Design

Silicon Trigger Card (STC) schematic

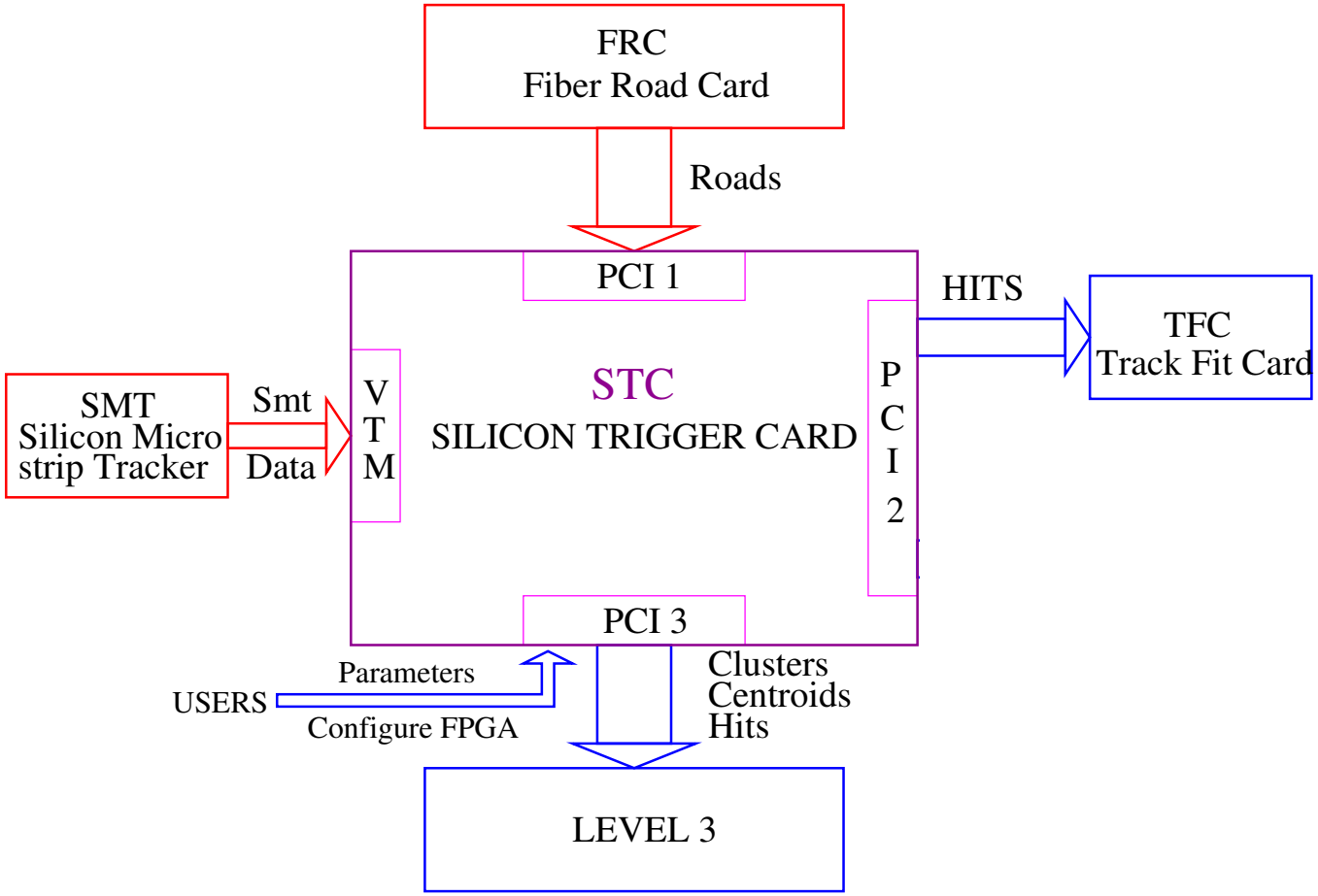

Performs silicon clustering and cluster-road matching

Clusters adjacent SMT hits (axial and stereo)

Axial clusters are matched to ± 2 mm-wide roads around each fiber track via precomputed LUT

Masks bad strips and applies pedestal/gain corrections (via LUT)

STC document: `http://physics.bu.edu/~azabi/documentation.ps` (as of Aug. 28 2002)

Track Fit Card (TFC) Design

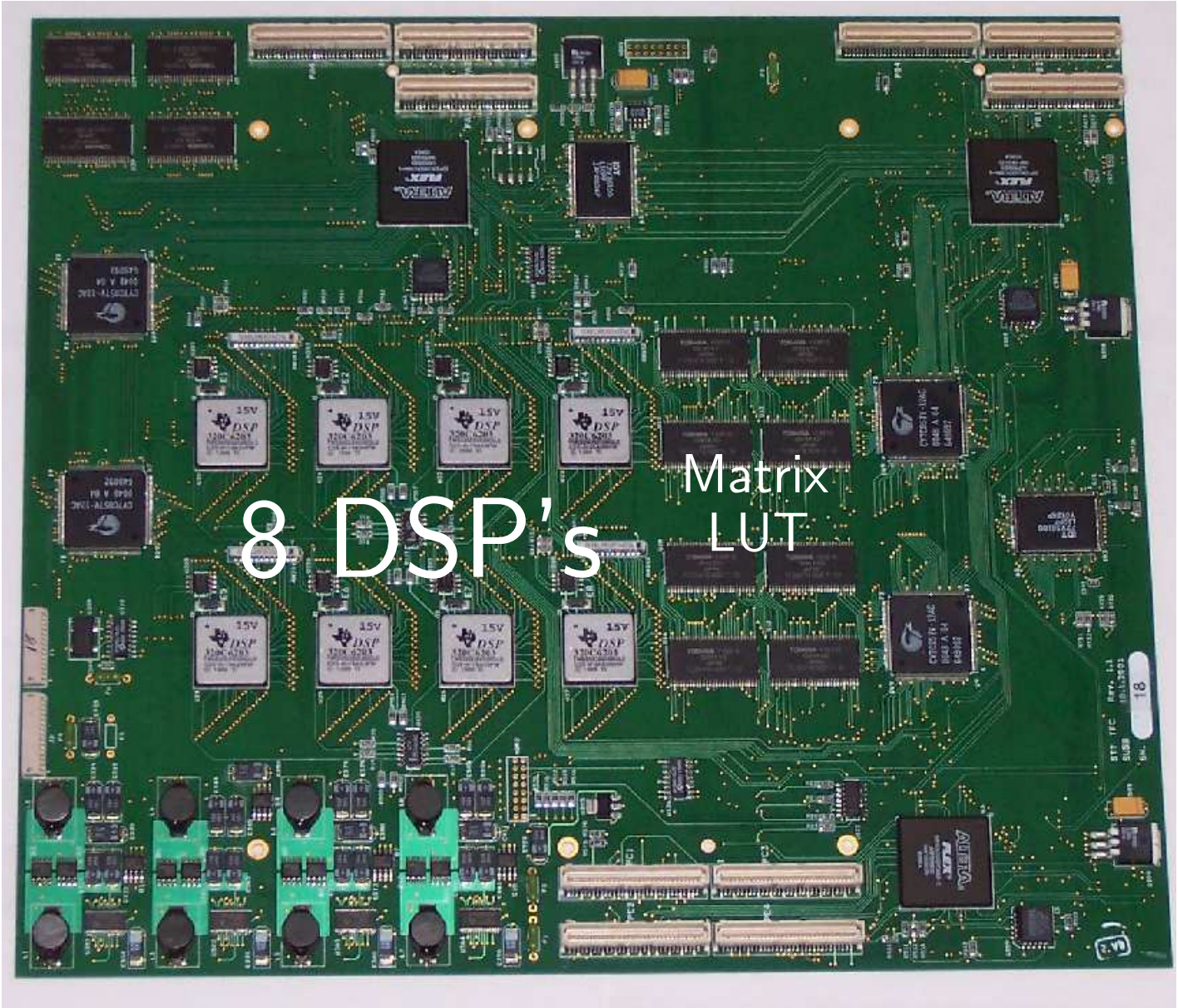

Track Fit Card (TFC) Schematic

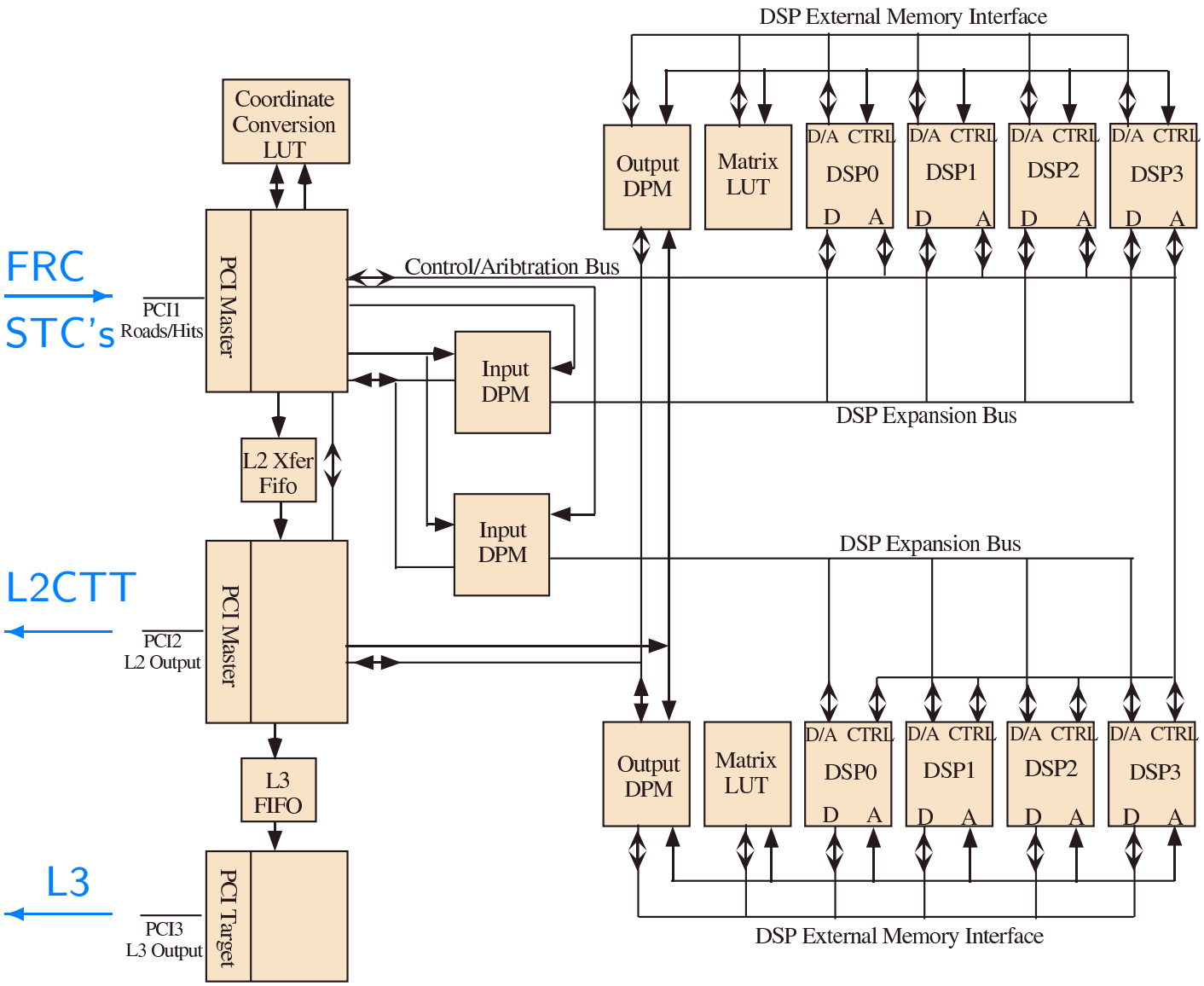

Performs final SMT cluster filtering and track fitting

Receives 2 CFT hits and axial SMT clusters in CFT road

Selects clusters closest to road center and performs linearized track fit using precomputed matrix elements stored in on-board LUT

$$\phi(r) = \frac{b}{r} + \kappa r + \phi_0$$

Requires only 3 out of 4 silicon layers

Output to L2CTT via Hotlink Transmitter cards

TFC document: `http://sbhepnt.physics.sunysb.edu/~hobbs/L2stt/tfc.pdf` (as of Jan. 21 2004)

Beamspot Monitoring

- Beamspot determined by vertex examine
- Written to coor name value server
- At beginning of run:
  coor tells comics to download values to
  - STT
  - L3 farms (for reconstruction)

Allowable beamspot variation for the STT:
- position < 1 mm
- tilt $< 5 \cdot 10^{-4}$

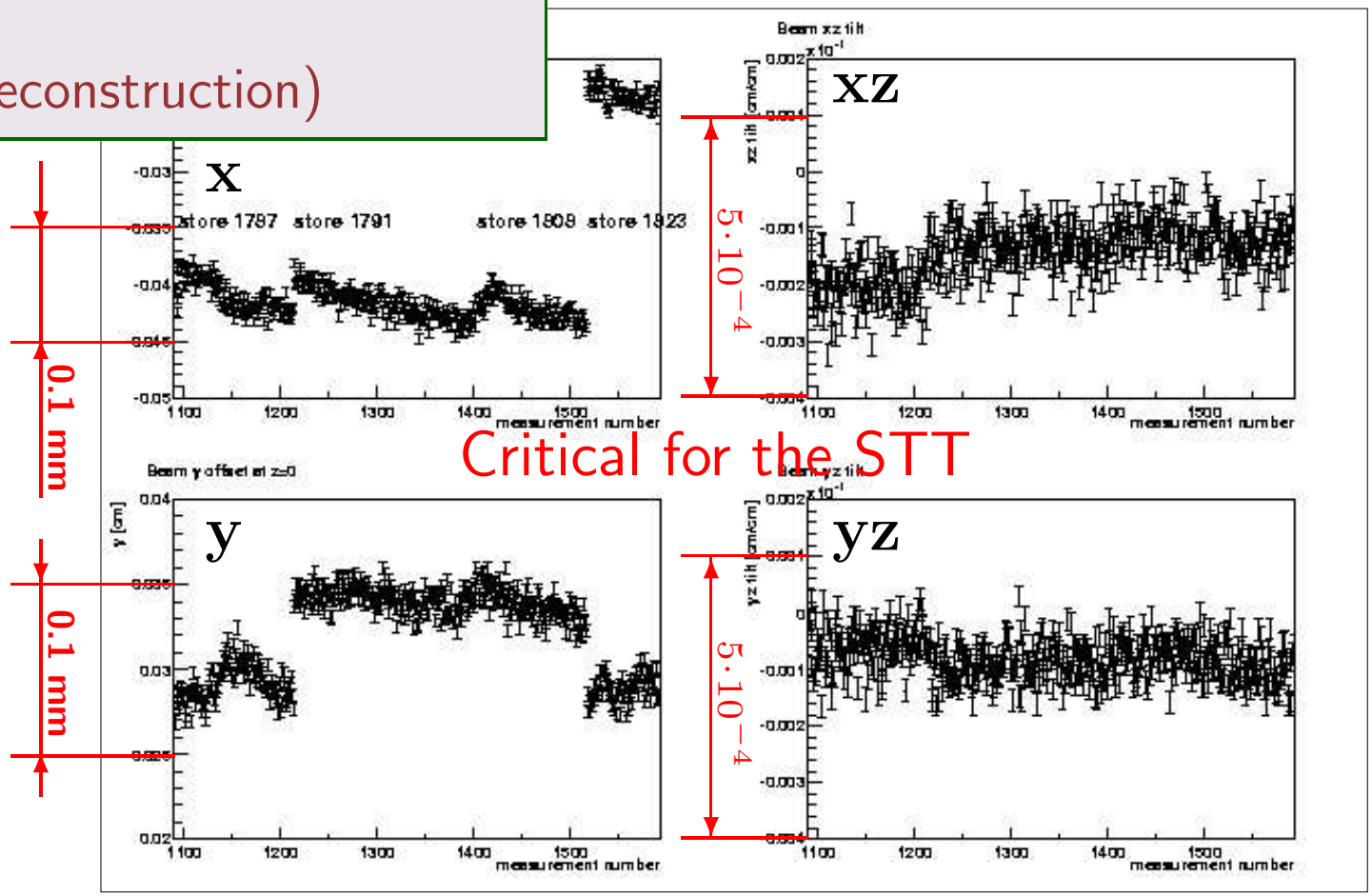

STT documents of general interest

DØ STT home page:
http://www-d0.fnal.gov/trigger/stt/

DØ STT Commissioning page:
http://www-d0.fnal.gov/trigger/stt/sttcommiss.html

Compact conference note about STT (Oct. 2000):
http://d0server1.fnal.gov/projects/Stt/Webdoc/papers/wt_ieee_tns001017.pdf

Trigger workshop (22 April 2002):
http://d0server1.fnal.gov/projects/Stt/Webdoc/talks/UH_020422.pdf

- What is relevant for the shifter

STT shifter web page

File Edit View Go Communicator Help

Back Forward Reload Home Search Netscape Print Security Shop Stop

Red Hat Network Training Support Software Hardware Developers Embedded Search Documentation Downloads Shop News

Bookmarks Location: http://www-d0online.fnal.gov/www/groups/stt/operations/stt_shift.html What's Related

Operating Instructions Checklist
Programs+Windows Contact Information
Detailed/Expert Instructions Troubleshooting To do/Special Requests

DØ Building Page: x4674
Primary STT Pager: 9-218-3481
Secondary STT Pager: 9-218-4462

STT Basic Operating Instructions

TOC will be automatically generated here and replace this text. Do not remove.

Basic Operating Instuctions

These instructions cover **basic STT running**. The essential items are

1. All STT crates and required input and output crates should be in the run. (See *umon* or ask DAQ shifter)
2. The standard programs should be running, and if we're in store
   - ~~the alarms and monitor displays should show all green conditions,~~
   - the examine plots should match the reference sets.
3. The download much match the magnet polarity and list of enabled HDI's must be correct.

See the section **starting from scratch** below for start up instructions, the accessing STT crates section for information about specific crates, and the **checklist** page to make sure the STT is running properly.

If the STT hangs, what does the shifter do? (Basic instructions)

If there are problems with crates 0x70 - 0x75, do the following

1. Request an **scl init**
2. Check to make sure the **PCI bus isn't hung** and then, if it's not, **Hard Reset (+ SBC reset if need be)**
3. **Pci reset** + **reboot** with "**Set FRC only**" in the download GUI followed by a **Hard Reset** in reset GUI
4. If the problem persists, call the pager expert..
   1. During normal working hours, use the building page to page the STT on call expert
   2. Outside normal working hours, or if the on call expert doesn't respod, call the pager

STT Reset GUI

```
[d0stt@d0ol36 stttestpython]: READING FRC/BC STATUS REGISTERS FOR d0olstt01...
Tue Apr  6 17:56:37 2004
FRC PCI1 Conf.Status 0x4: 4000146
FRC PCI2 Conf.Status 0x4: 4000146
PCI-1 status register: 0x10800aa
PCI-2 status register: 0x10800aa
PCI-3 status register: 0x60ff022f
TRDF Status Register: 0x1004c
SCLF Status Register: 0x010c
BM Status register 0: 0x0002
BM Status register 1: 0xfa0000
READING BC STATUS REGISTERS ON ALL MOTHERBOARDS
BC status (FRC: SLOT 13):  0x11000325
BC status (STC0: SLOT 8):  0x11000d25
BC status (STC1: SLOT 9):  0x11000d25
BC status (STC2: SLOT 10): 0x11000d25
BC status (STC3: SLOT 11): 0x11000f25
BC status (STC4: SLOT 12): 0x11000d25
BC status (STC5: SLOT 14): 0x11001025
BC status (STC6: SLOT 15): 0x11000d25
BC status (STC7: SLOT 16): 0x11000d25
BC status (STC8: SLOT 17): 0x11000d25
BC status (TFC0: SLOT 7):  0x110006a5
BC status (TFC1: SLOT 18): 0x110004a5
*************************************************************
DO ANY OF THE STATUS REGISTERS SHOW 0Xffffffff
  OR ARE ANY CARDS REPORTING A PROBABLE HANG?
-------------------------------------------------------------
IF THE ANSWER IS YES,DO THE FOLLOWING:
PAUSE RUN
CLICK ON Set Frc Only IN STT DOWNLOAD GUI
CLICK ON PCI RESET
REBOOT CPU
CLICK ON DEBUG DUMP
CLICK ON HARD RESET
RESUME RUN
-------------------------------------------------------------
IF THE ANSWER IS NO, TRY SCLINIT AND IF NEED BE A HARD RESET
```

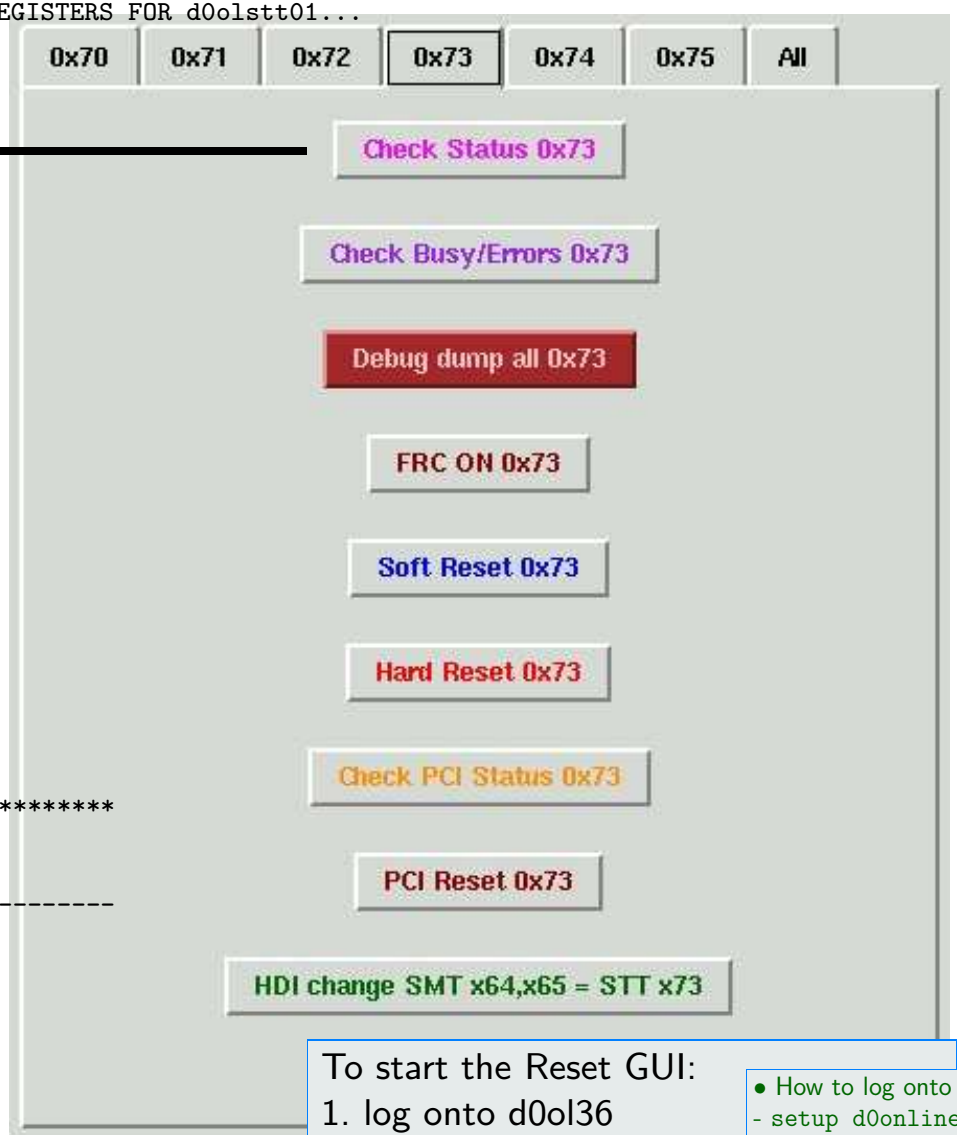

To start the Reset GUI:
1. log onto d0ol36
2. setup d0online
3. cd /scratch/stt/debug/stttestpython
4. sttResetGui.py &

- How to log onto d0ol36:
  - `setup d0online`
  - `d0ssh d0stt@d0ol36`

Check Busy/Errors button

```
[d0stt@d0ol36 stttestpython]: *****************CRATE X71******************
==========================================================================================
                              FRC STATUS INFORMATION:
CRATE:  d0olstt01
SLOT :  13
Tue Apr  6 17:59:08 2004
==========================================================================================

                                 TRDF STATUS REGISTER
==========================================================================================
OPTION                              STATUS            OPTION                        STATUS
==========================================================================================
BOE MISSING ERROR   if yes ⇒        no (0)  ||   BX MISMATCH ERROR   CTT input    no (0)
EOE MISSING ERROR                   no (0)  ||   NO CTT DATA         problem      no (0)
RESERVED                            no (0)  ||   RR SM IDLE                       yes(1)
RR_DATA LATCH                       no (0)  ||   RR_DATA_WRITE                    no (0)
RR_FIFO_EMPTY                       yes(1)  ||   RR_FIFO_FULL                     no (0)
RR_FIFO_FULL LATCHED                no (0)  ||   START TEST                       yes(1)
TEST MODE                           no (0)  ||   TEST_REPEAT                      no (0)
TRDF STARTED                        yes(1)  ||   TURN MISMATCH ERROR              no (0)
==========================================================================================

.
.
.

                                BM STATUS REGISTER 0
==========================================================================================
OPTION                              STATUS            OPTION                        STATUS
==========================================================================================
GET_ALL_WAIT                        no (0)  ||   GET_DONE TIMEOUT                 no (0)
GET_DONE_WAIT                       no (0)  ||   L1 FIFO FULL                     no (0)
L2 FIFO FULL                        no (0)  ||   L3XFER NUMBER FIFO FULL          no (0)
MON DONE                            no (0)  ||   MON IN PROGRESS                  no (0)
MON INTERRUPT                       no (0)  ||   PCI3 L3 FIFO FULL                no (0)
PUT_ALL_WAIT                        no (0)  ||   PUT_DONE TIMEOUT                 no (0)
PUT_DONE_WAIT                       no (0)  ||   SCL DONE                         no (0)
SCL INIT ACK                        no (0)  ||   SCL INTERRUPT                    no (0)
SCL REQ                             no (0)  ||   SLAVE READY                      no (0)
```

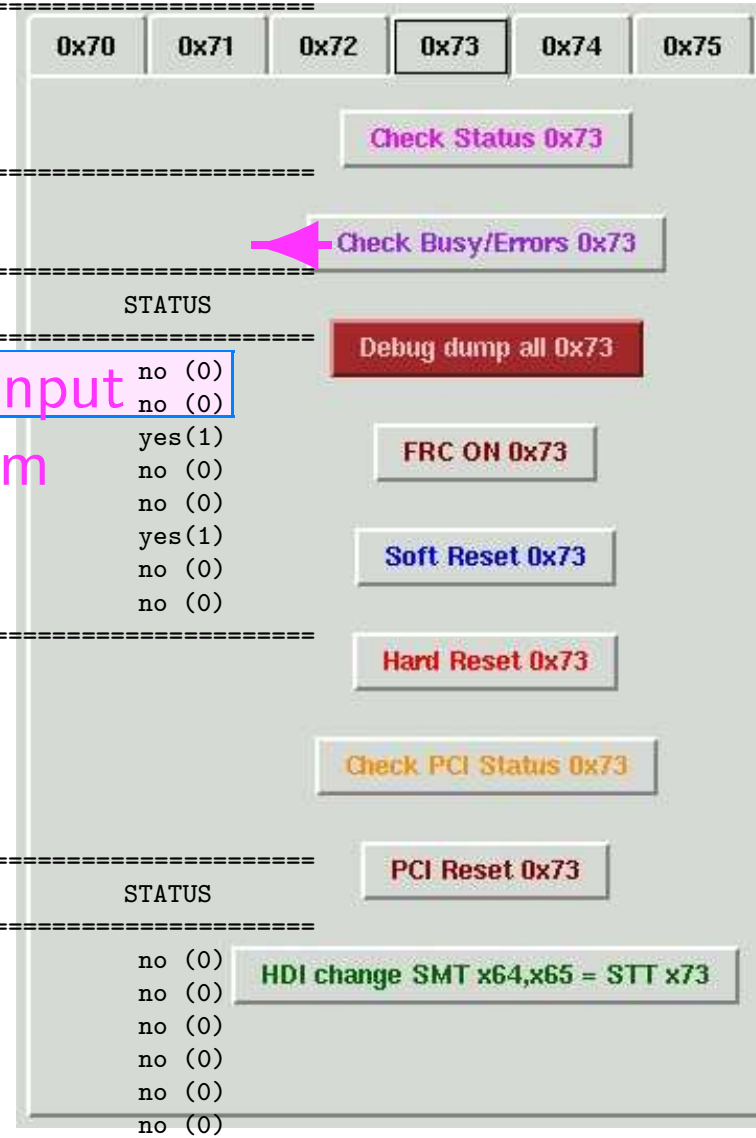

if yes ⇒ reboot (FRC only download)

Check Busy/Errors output (continued)

```
SLV_DONE_CHK                          no (0)  ||   SLV_DONE_END                          no (0)
SOFTWARE TRIGGERED DMA (no SBC)       no (0)  ||   START BM                              yes(1)
==============================================================================================

                                 BM STATUS REGISTER 1
==============================================================================================
OPTION                                 STATUS          OPTION                            STATUS
==============================================================================================
BM_L1_BUSY                                0   ||   BM_L2_BUSY                                0
GET DONE                                  0   ||   GET DONE#                                1
L1 BUSY                                   0   ||   L1 ERROR                                  0
L2 BUSY                                   0   ||   L2 ERROR                                  0
OVERFLOW_ERROR (L1)                       0   ||   OVERFLOW_ERROR (L2)                       0
PUT DONE                                  0   ||   PUT DONE#                                1
STT_L1BUSY#                               1   ||   STT_L1ERROR#                             1
STT_L2BUSY#                               1   ||   STT_L2ERROR#                             1
STT_OUTPUT FIFO FULL (Latched)            0   ||   XFER_ERR_SBC                             0
XFER_IN_ERR                               0   ||   XFER_OUT_ERR                             0
==============================================================================================

LRB status (mip6)
  CSR:             003f1260
  Status register: 00200007
  Receiver counters
    Channel    Words    Blocks     Fixed    Error   ID Err  Fifo
      0            0           0       0        0        0    0
      1            0           0       0        0        0    0
      2            0           0       0        0        0    0
```

Fiber Road Card (FRC)
Link Receiver Board (LRB)

Debug dump all

Push this button to make a debug dump by hand. If one or several STT crates go L1 or L2 Front End Busy (verify in Daq_Dialog monitoring GUI) an SCLinit issues automatically a debug dump onto `d0ol66:/scratchb/vxworks/debug/`
This binary debug dump can be converted to human readable text via the debug_dump-binary.csh script in `~d0stt/stttestpython/`
and
`d0ol36:/scratch/stt/debug/stttestpython/`

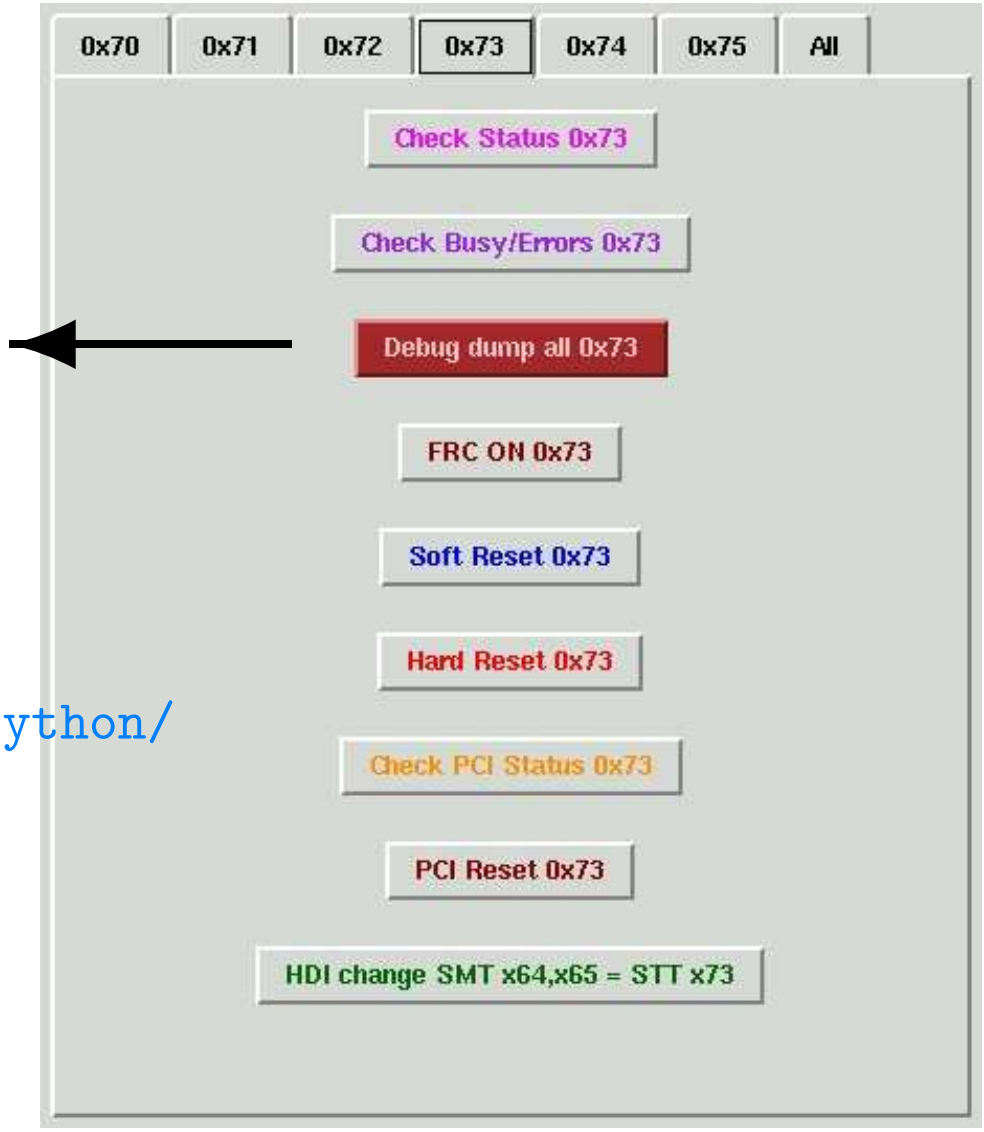

Switching a crate into run mode, Resets, etc.

After any Input Output Controller (IOC) reboot or power cycle switch a crate on (into run mode) before putting it into a run

Soft reset a crate (configuring Fiber Road Card (FRC)), includes an FRC ON

Hard reset a crate (resetting all daughter-bords), includes an FRC ON

PCI bus status, need to open a telnet session to the IOC to verify the status printout

PCI bus reset, needed before reboot in case of bus hang

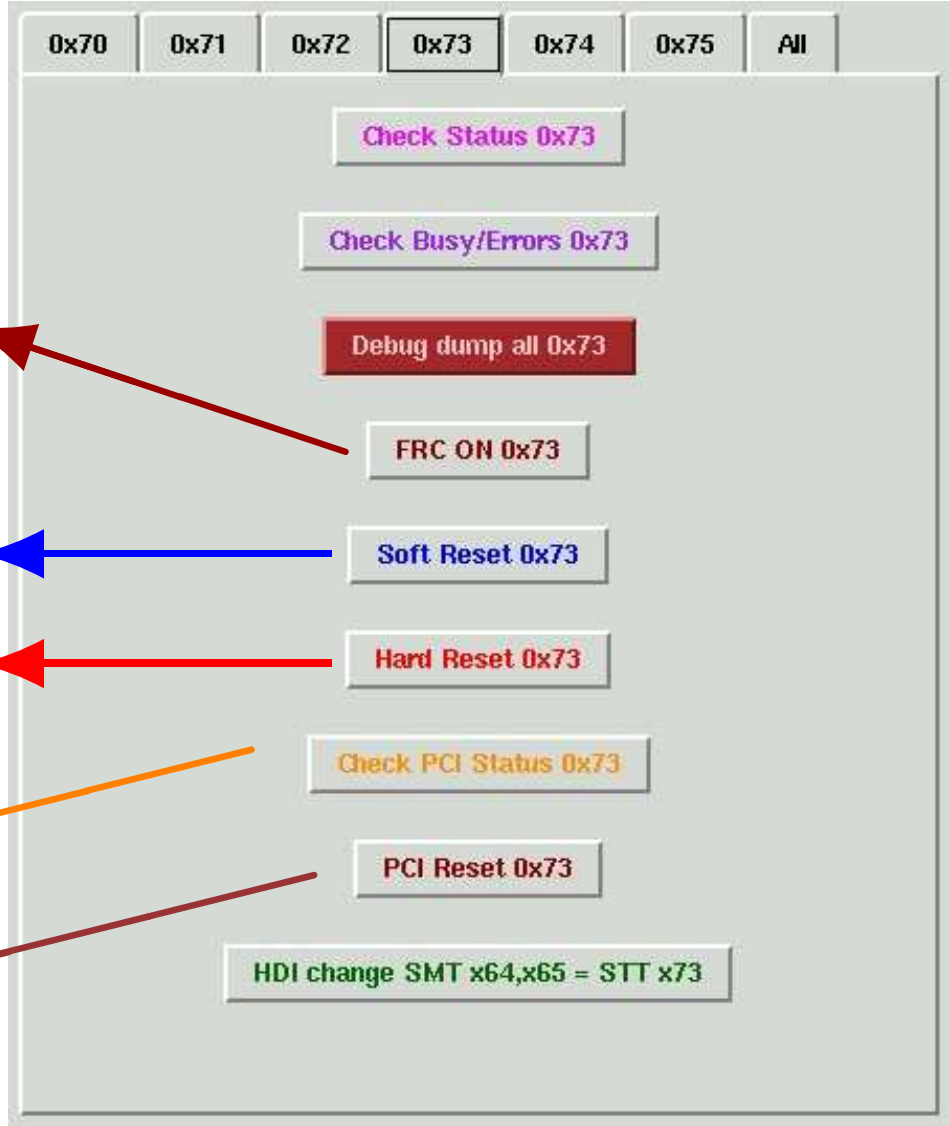

Updating enabled/disabled HDI's

Just for SMT crates 0x64 and 0x65

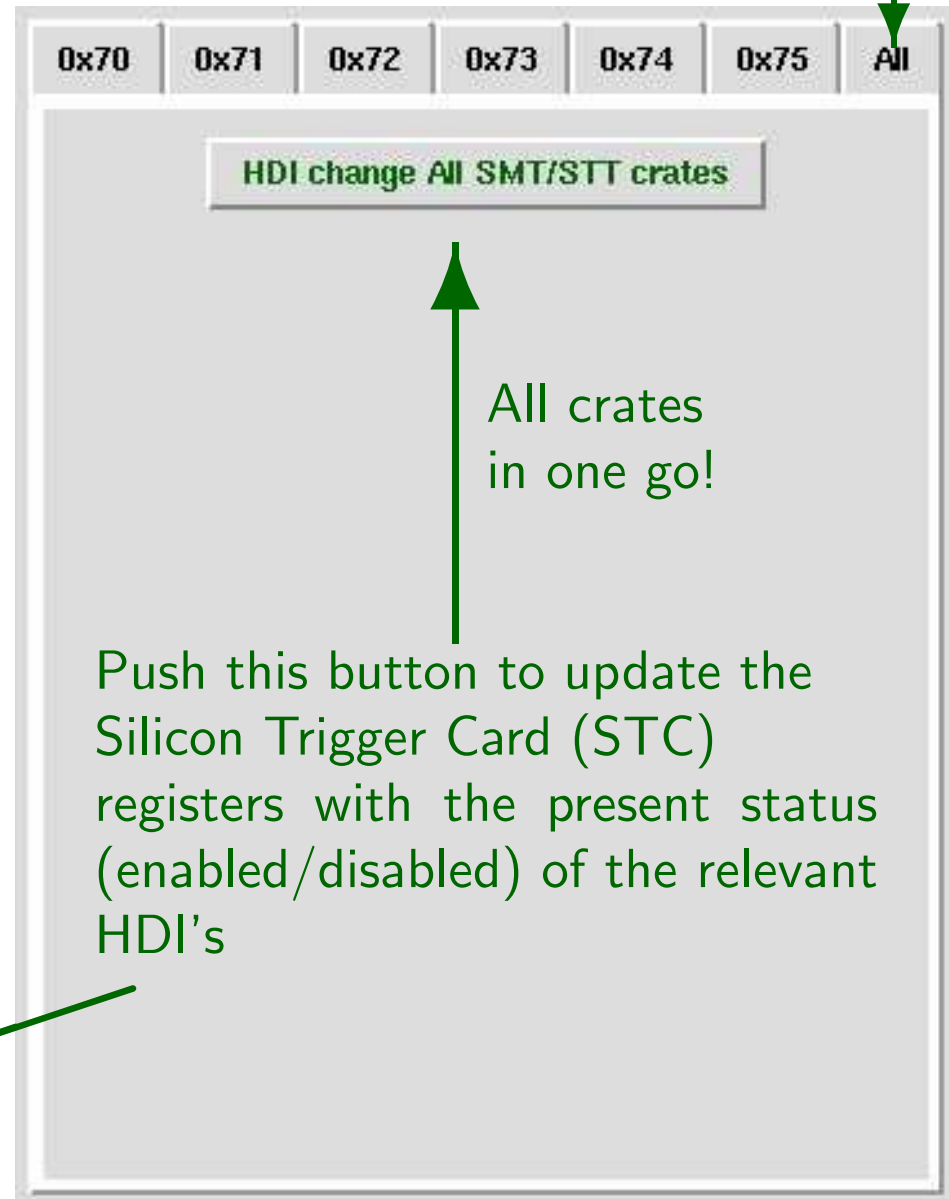

All crates in one go!

Push this button to update the Silicon Trigger Card (STC) registers with the present status (enabled/disabled) of the relevant HDI's

STT Alarm GUI

To start the alarm GUI:
1. setup d0online
2. start_alarm_matrix -c /online/config/stt/mtx &

File View Settings Help

	CPU	FRC	TFC0	TFC1	STC0	STC1	STC2	STC3	STC4	STC5	STC6	STC7	STC8
GS 0x70	0	1	6	6	0	0	0	0	0	0	0	0	0
GS 0x71	0	1	6	6	0	0	0	0	0	0	0	0	0
GS 0x72	0	1	6	6	0	0	0	0	0	0	0	0	0
GS 0x73	0	3	10	9	0	0	0	0	0	0	0	0	0
GS 0x74	0	1	6	6	0	0	0	0	0	0	0	0	0
GS 0x75	0	1	6	6	0	0	0	0	0	0	0	0	0

Status: Connection to server started

GS 0x73

STT_FRC_73/BM1L1E
STT_FRC_73/TRDCTT
STT_FRC_73/ICTT-ERR:R

SHOW
GUIDANCE
CLOSE

```
Guidance from /online/config/ses/guidance/stt/STT_FRC_TRDCTT.txt:
* CTT data is missing.
* Error type : Event has no CTT data.
* Description: The data does not have CTT tracks.  This is most
*              likely due to corrupted data coming from the CTT.
* Action in case of:
*    If not in store, this is fine, and is probably due to a
*              CTT calibration.
*    If in store:
*
*    *ONLY IF THE ERROR HAS STOPPED DATA FLOW* :
*
*    (1). SCL Init
*    If the problem persists:
*    (2). Hit the "Hard Reset" button for the crate in the sttResetGui.
*    (3). If (1) and (2) don't work then ask the CFT/CTT shifter to
*         issue a resetSTT and/or a FixCTT.
*
*
*  Expert pager: 218-3481        Secondary pager: 218-4462
*
Guidance from /online/config/ses/guidance/stt/STT_FRC.txt:
http://www.fnal.gov
```

CLOSE

Clicking on the alarms reveals more information and suggests (partly) actions.

Download Settings

To start the Download Selection GUI:
1. setup d0online
2. /online/config/stt/utils/py/dwnlGui &

Downloading all cards (after power cycle, to (re-)download LUT's)

Expert use only

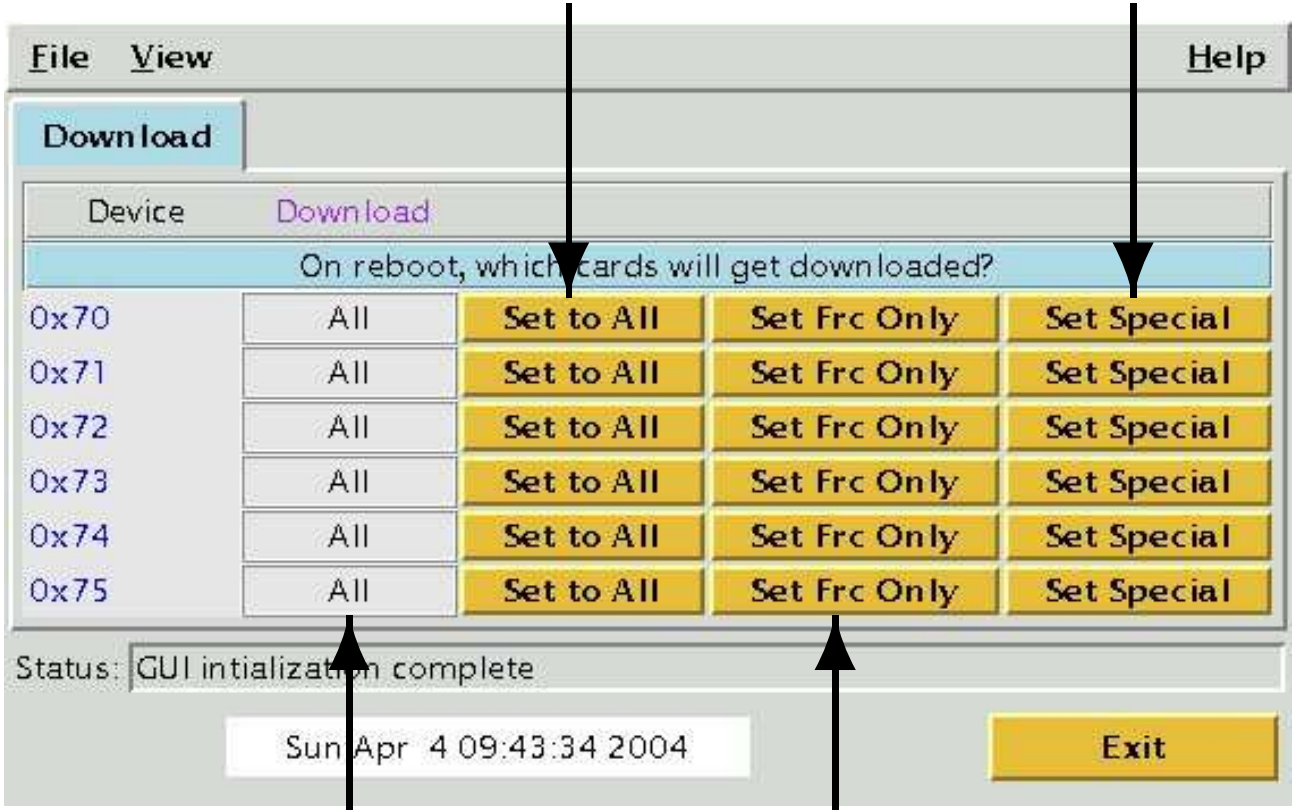

Shows current settings

If PCI bus hang, reboot in this configuration (faster)

Rebooting an IOC

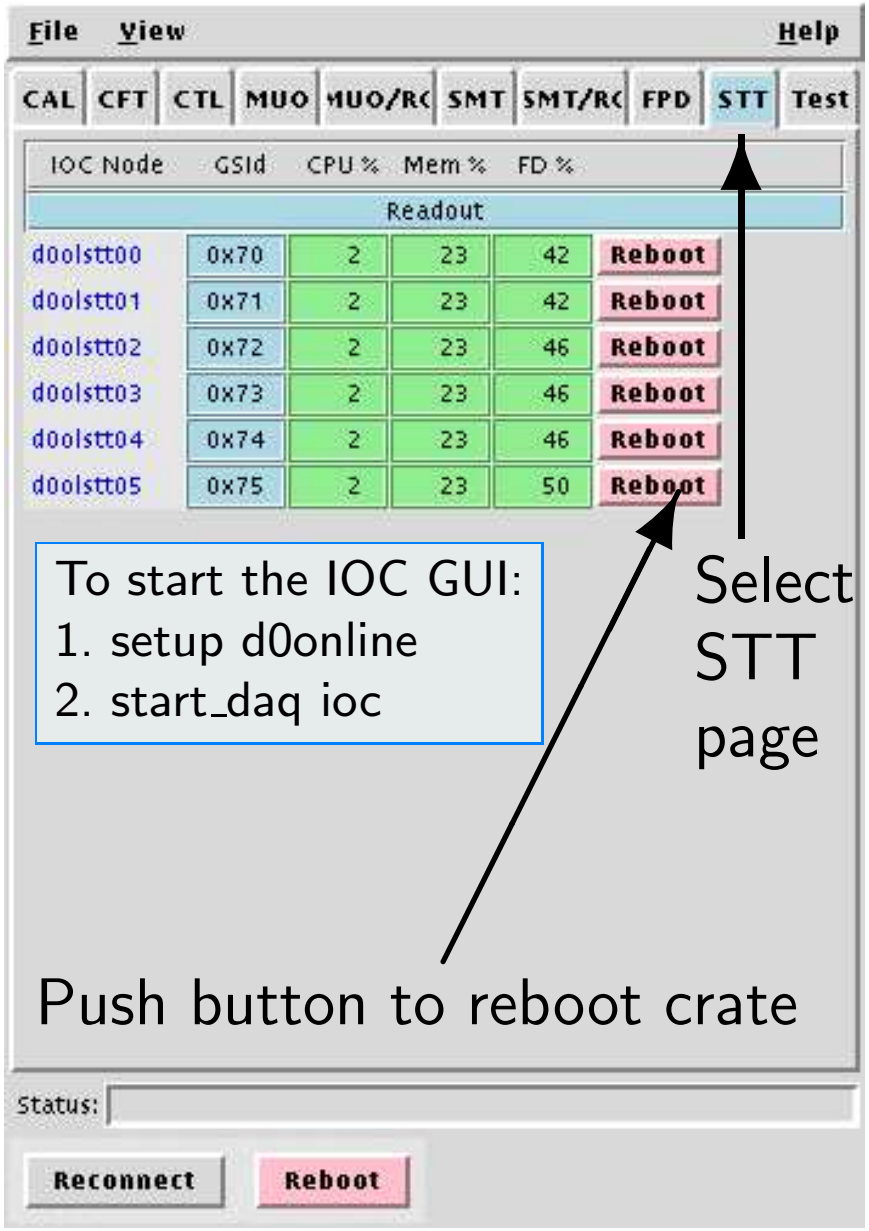

- When pushing the "Reboot" button a window pops up asking for the password (DAQ shifter or SMT/STT expert should know it). If the correct password is entered the crate will be rebooted.
- Watch the "CPU %", "Mem %" and "FD %" fields. They have to reach stable green i.e. reboot is finished.
- Typically FRC only reboot takes 1min.30s while reboot with download "All" takes 3min.45s.
- If the fields stay green all the time you may have misspelled the password ⇒ no reboot
- After reboot, a crate has to be put into run mode via "Hard Reset"

Solenoid Magnet Polarity

Update Link + reboot with Download "All" whenever polarity changes
Remember to switch crates into run mode after reboot (Hard Reset)

Shows current solenoid magnet polarity

Brings LUT's in accordance with magnet polarity

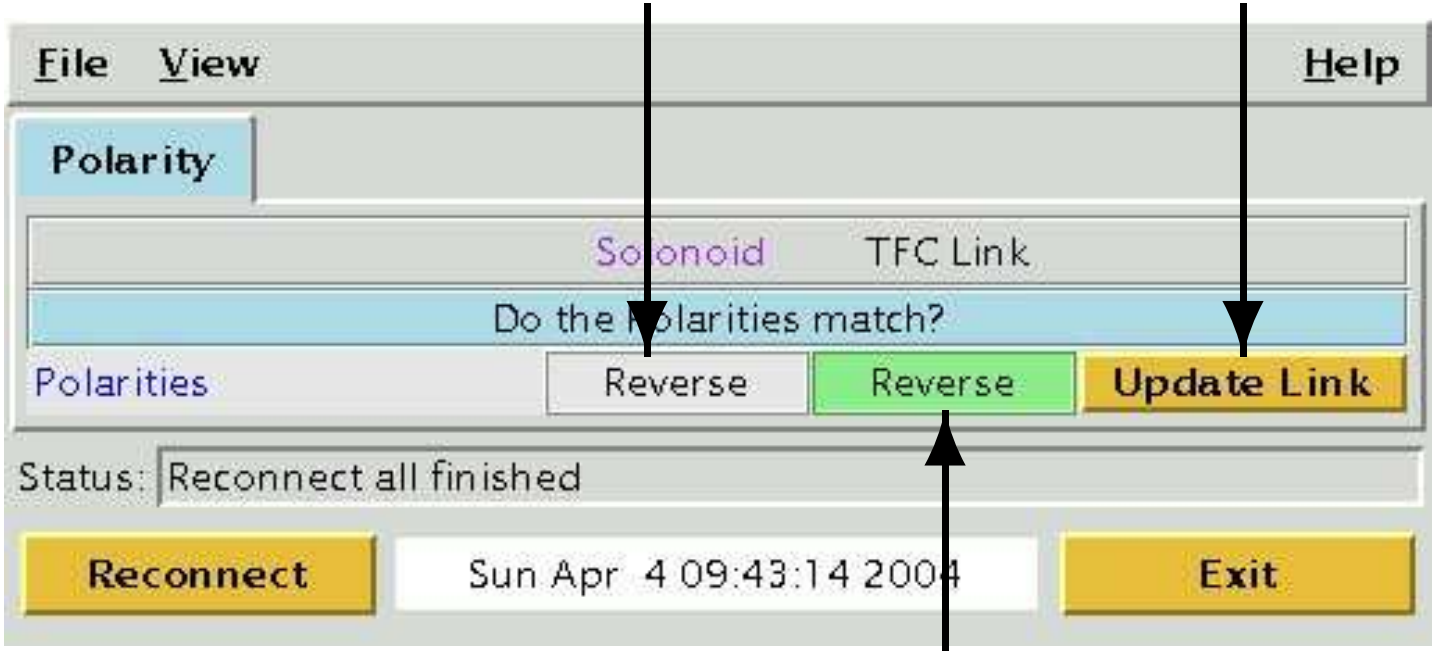

Shows which set of LUT's will be used if downloaded (green=OK, red=wrong polarity)

To start the Magnet Polarity Selection GUI:
1. setup d0online
2. /online/config/stt/utils/py/sttPolarityGui.py &

Solenoid Magnet Polarity update instructions

• At beginning of Shift:

Ask the shift Captain if the magnet polarity is expected to change during the shift (typically between stores). If so, notify the captain that you will require ten minutes before the beginning of the store to download the STT crates after the magnet has been energized with the new polarity.

• In case of solenoid magnet polarity change check the "Solenoid Magnet Polarity GUI":

• When the downloaded magnet polarity and the current solenoid polarity disagree, click the "Update Polarity" button.

• In the "Download GUI" select the "Set to All" button for all six crates.

• Ask the DAQ shifter to pause the run.

• In the "IOC GUI" push the reboot button for the appropriate crate.

• Wait until the reboot is completed ($\sim$ 3min.45s)

• In the "Reset GUI" select the "Hard Reset" button for each crate, one after another.

- When the crates are reset, the run may be resumed.

STT Archiving Instructions

- Each Friday on day Shift:

- log onto `d0ol37` as user d0stt
- go into the archiver directory: `cd ~d0stt/run_archive/`
- start the shell script `maintain_archive.sh`
- log onto `d0olb` as user d0stt
- go into the archiver directory: `cd ~d0stt/run_archive/`
- start the shell script `archive_to_SAM.sh`
- if failing try the script `archive_to_SAM_resubmit.sh`

- Restarting archiver after power outage or reboot of `d0ol37`:

- log onto `d0ol37` as user d0stt
- go into the archiver directory: `cd ~d0stt/run_archive/`
- check if archiver is runnig: `check_archive.py`
- if it returns *"no archiver running ..."* issue: `maintain_archive.sh`

- How to log onto another online node (e.g. d0olxy):

- `setup d0online`
- `d0ssh d0stt@d0olxy`

STT Examine instructions

- How to log onto another online node (e.g. d0ol66):

```
- setup d0online
- d0ssh d0stt@d0ol66
```

On `d0ol66` in the directory:
`/mnt/examine/p16.00.00/stt-examine`

- before starting a new examine:
  kill all (three) automatically popped-up windows
  (`.q` to quit root session and `Ctrl-C` to quit x-terms)

start the examine with the shell script:

- `RunSTT-Examine.sh` (for global physics runs)
- `RunSTT-Examine_ZB.sh` (for zero bias runs)
- `RunSTT-Examine_special.sh` (for special runs)

- At the beginning of every physics run
  restart STT examine
- Towards the end of physics run save examine plots:
  On the GMbrowser menue bar
  click in the "FILE" menue on "SAVE ALL"

STT Examine instructions (continued)

- Check if the impact parameter distributions for each sextant resemble approximately the reference histogram.
  - If not, is there a double peak structure in one of the sextants?
  - If so, call the STT on-call expert. In the mean time, if possible, ask the DAQ shifter to pause the run.
  - In the "Download GUI" select Download "ALL" for the appropriate STT crate.
  - In the "IOC GUI" push the reboot button for the appropriate crate.
  - Wait until the reboot is completed ($\sim$ 3min.45s)
  - In the "Reset GUI" select the "Hard Reset" button for that crate.
  - When the crate is reset, as the DAQ shifter to resume the run.
  - Restart the examine and check if the secondary peak has disappeared.
- Check if SMT $R - \phi$ hit distribution is missing whole sextants
  - If yes try a "Hard Reset", then call expert
- Check FRC error histograms for L1/L3 BX errors
  - If there are any, try a "Hard Reset", then call the expert

STT Examine: Global distributions

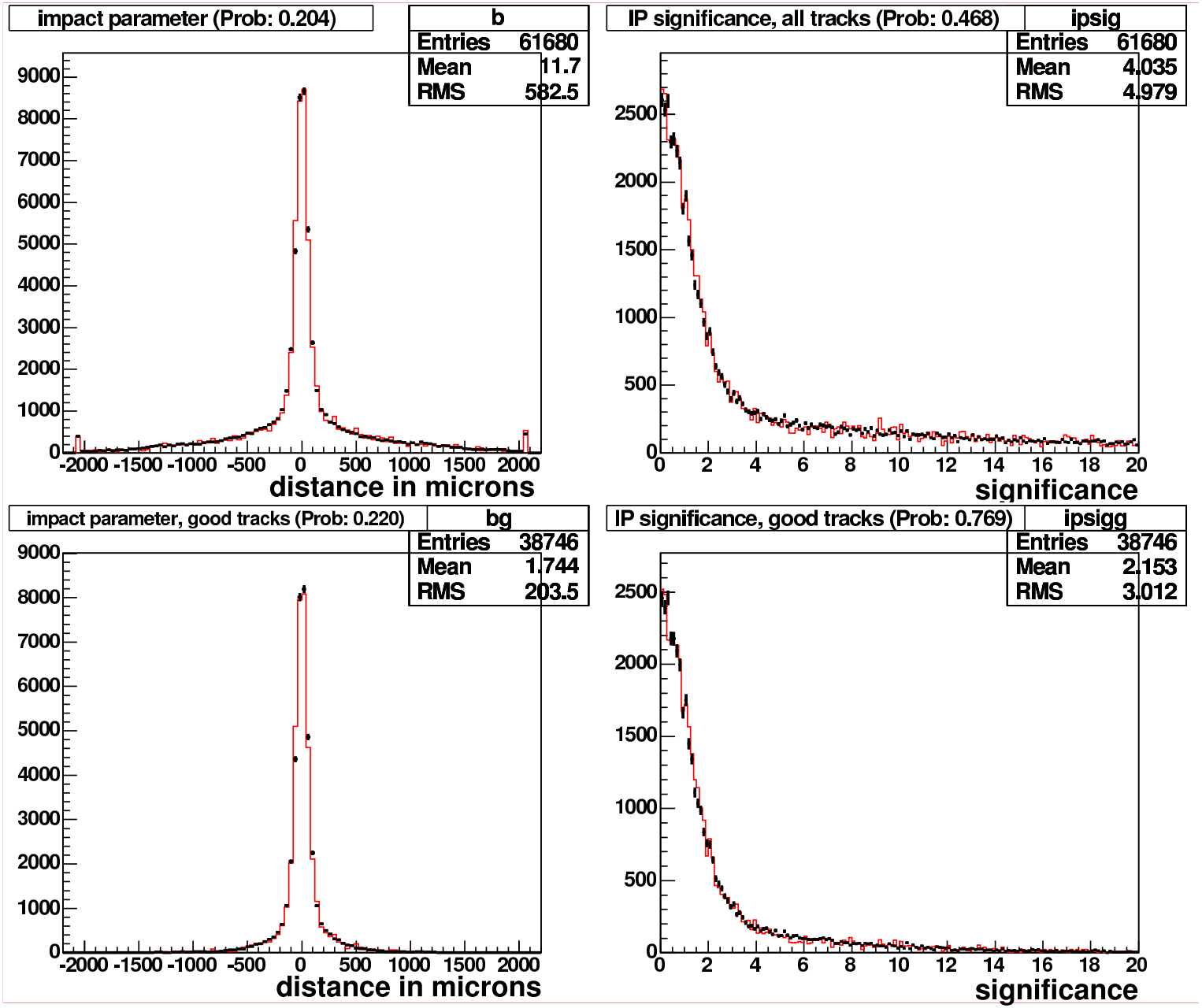

STT Examine: Global distributions

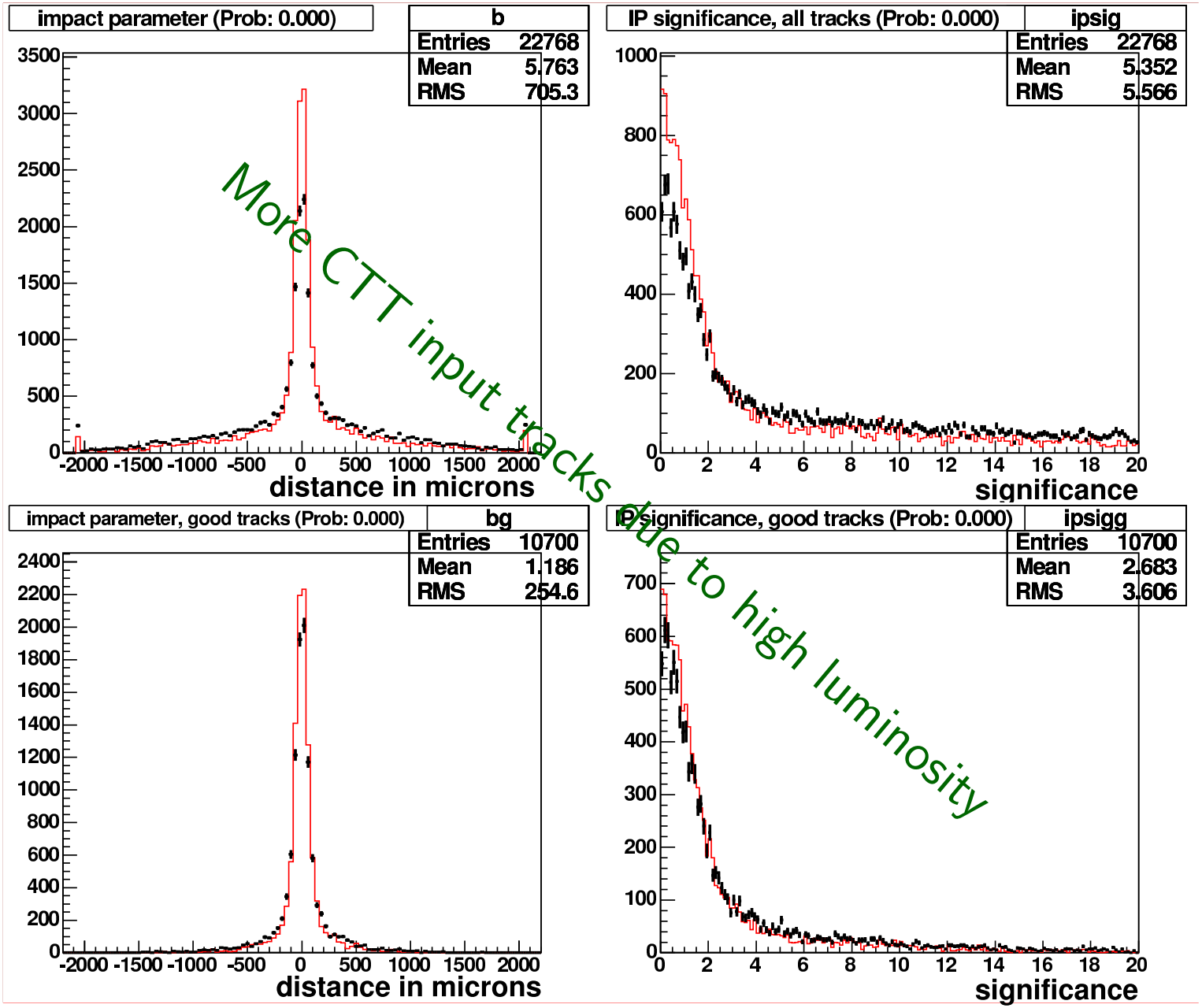

STT Examine: Global STT and CTT distributions

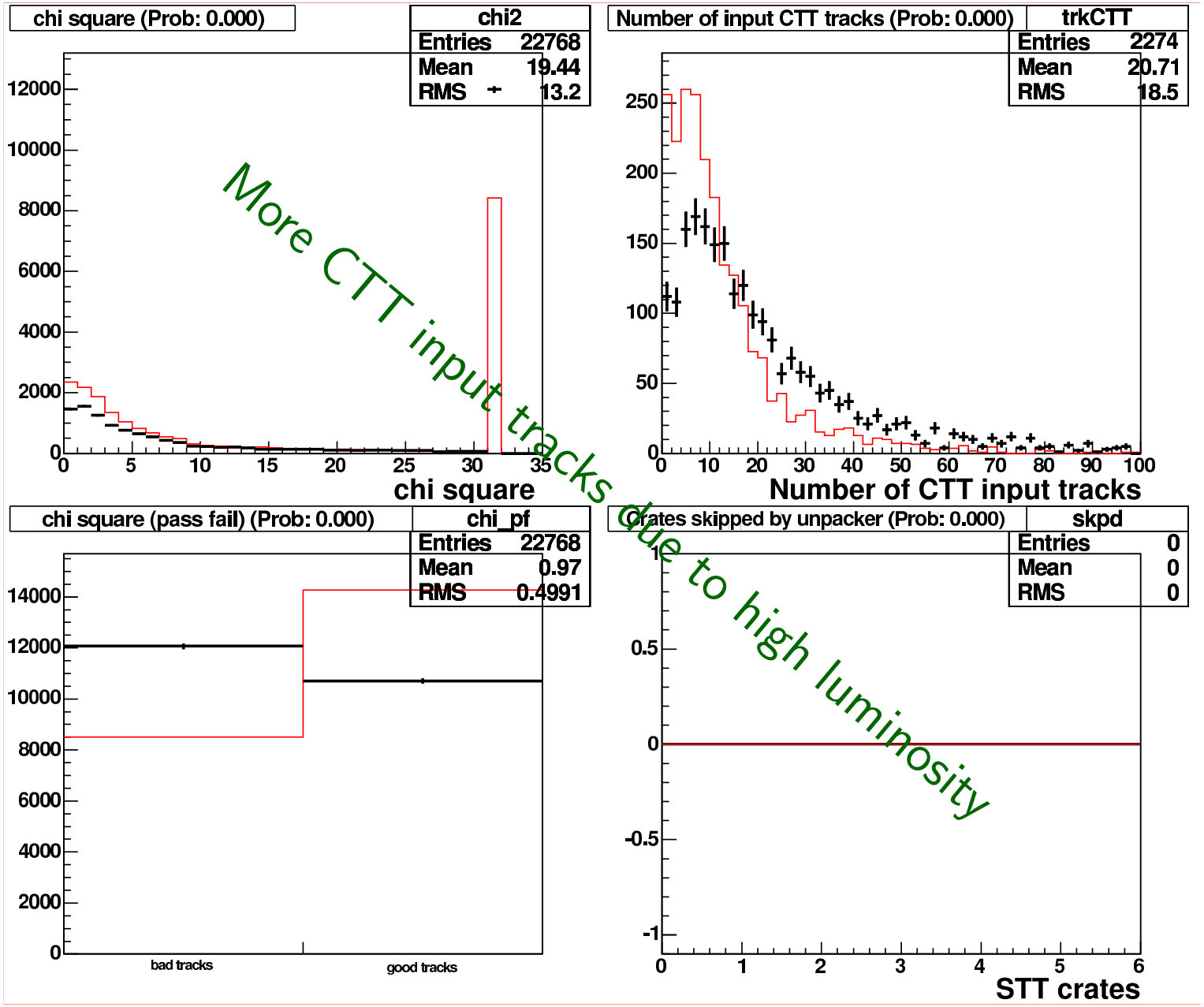

STT Examine: Track transverse momentum

Verify examine plots, watch out for "abnormal" deviations

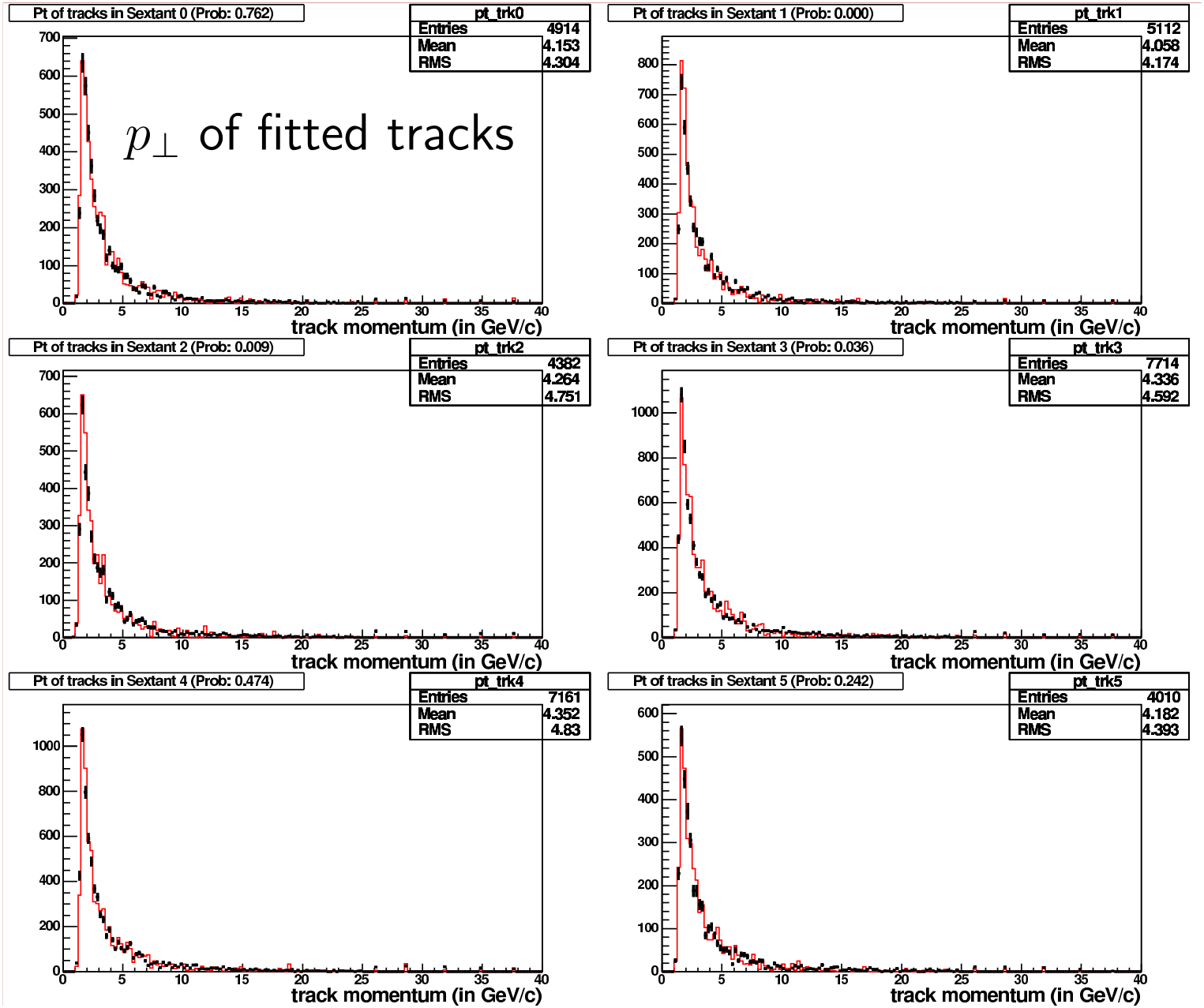

STT Examine: Impact Parameter

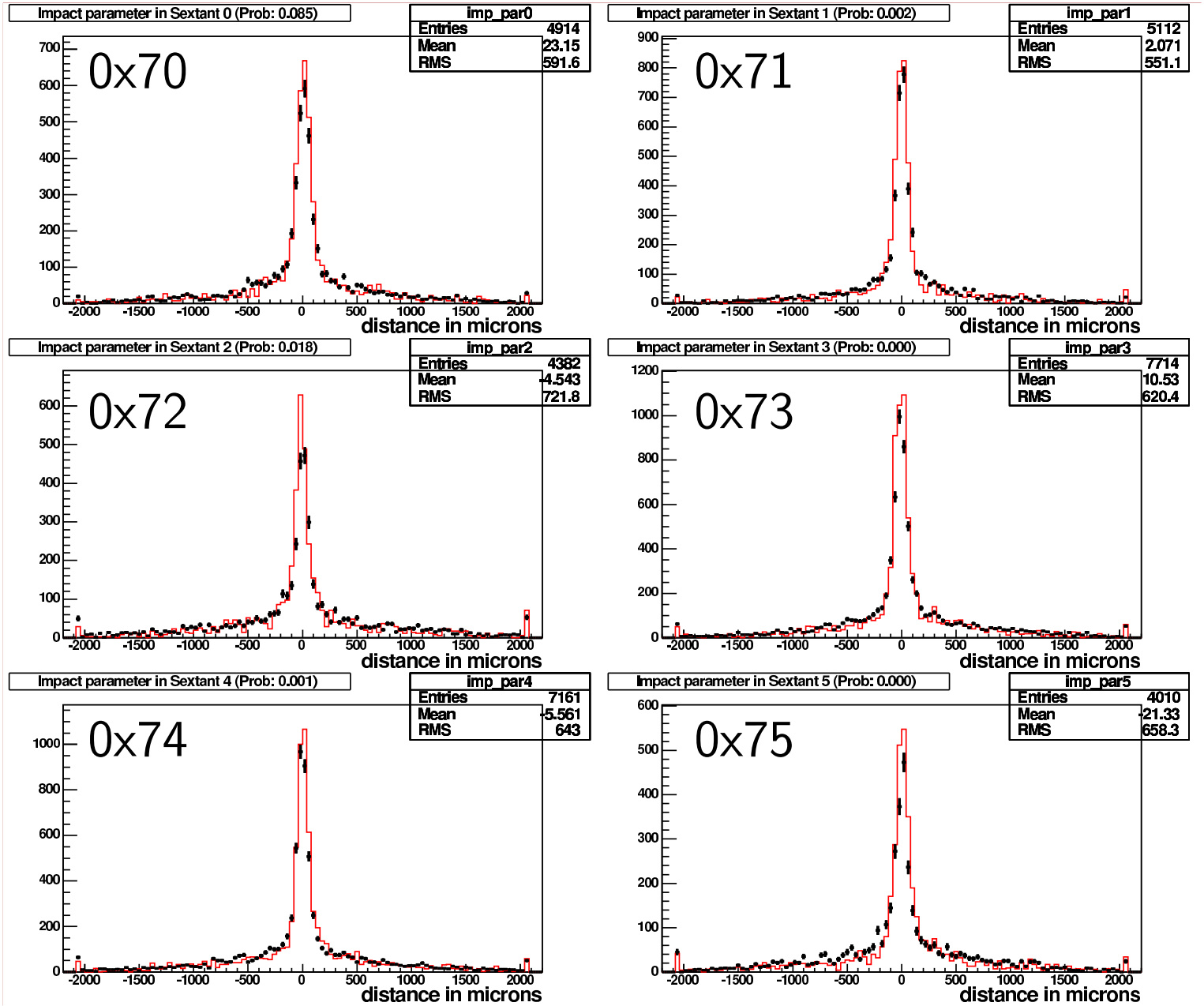

STT Examine: Impact Parameter

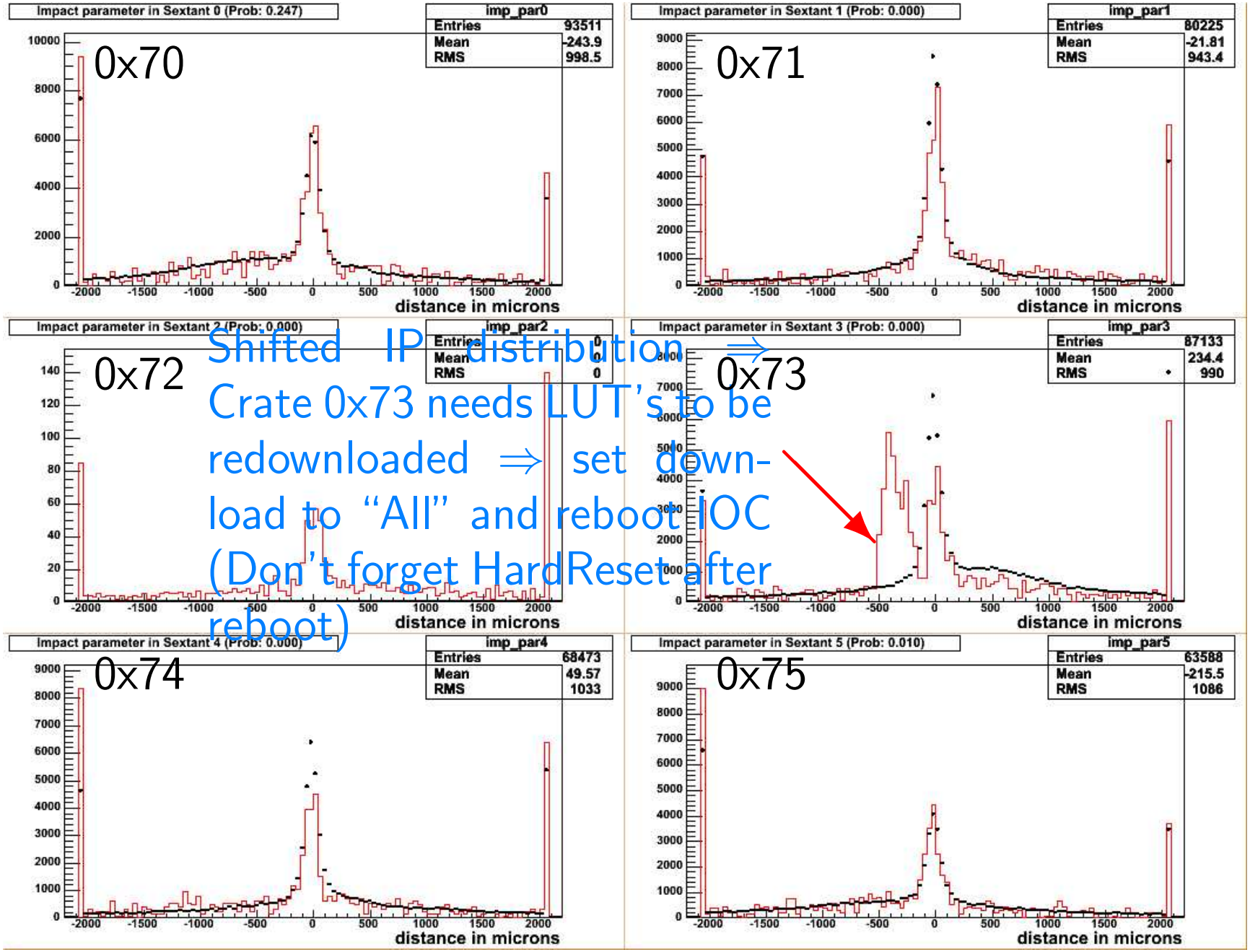

Shifted IP distribution $\Rightarrow$ Crate 0x73 needs LUT's to be redownloaded $\Rightarrow$ set down-load to "All" and reboot IOC (Don't forget HardReset after reboot)

STT Examine: Impact Parameter

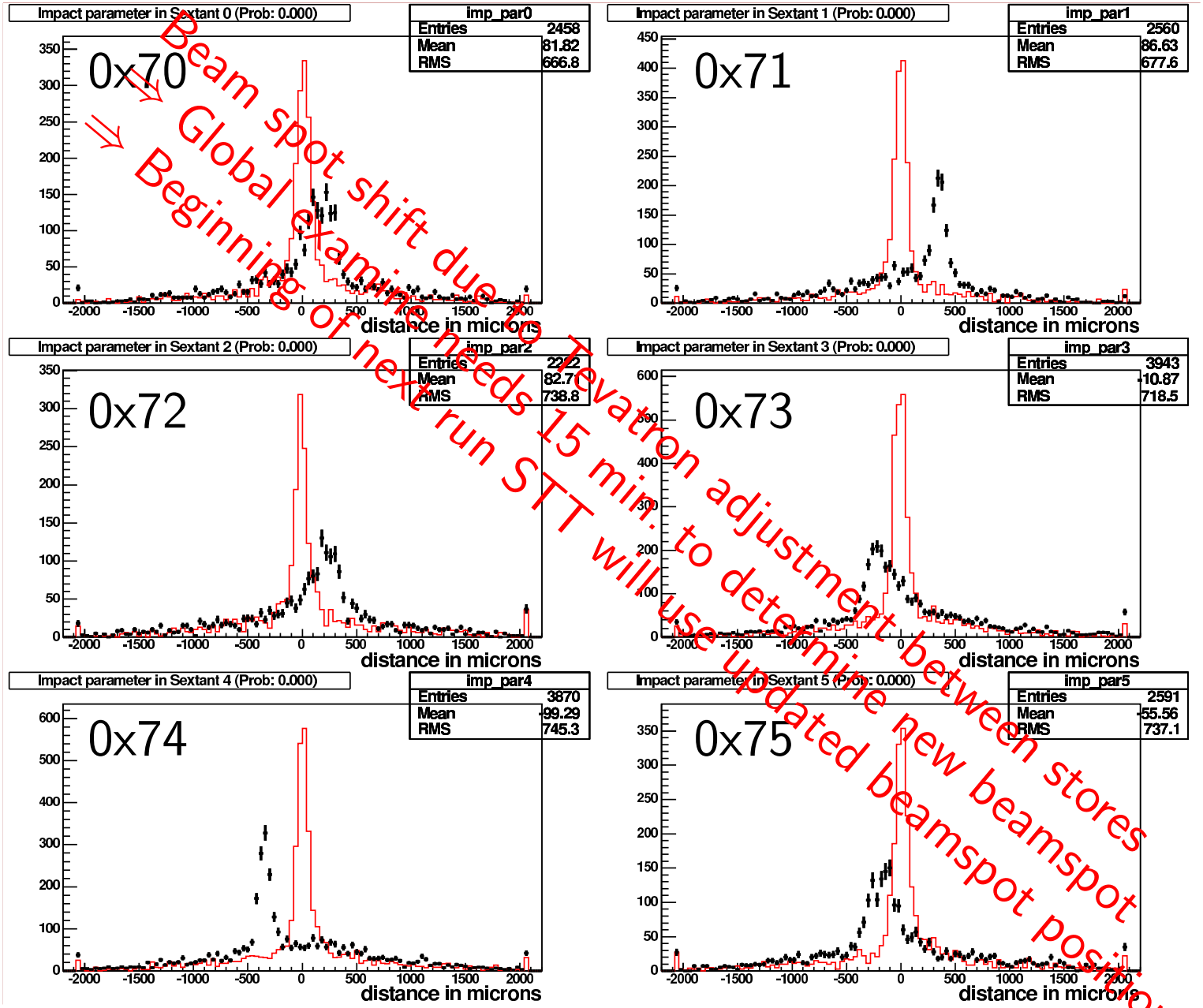

Beam spot shift due to Tevatron adjustment between stores
⇒ Global examine needs 15 min. to determine new beamspot
⇒ Beginning of next run STT will use updated beamspot position

STT Examine: Global distributions

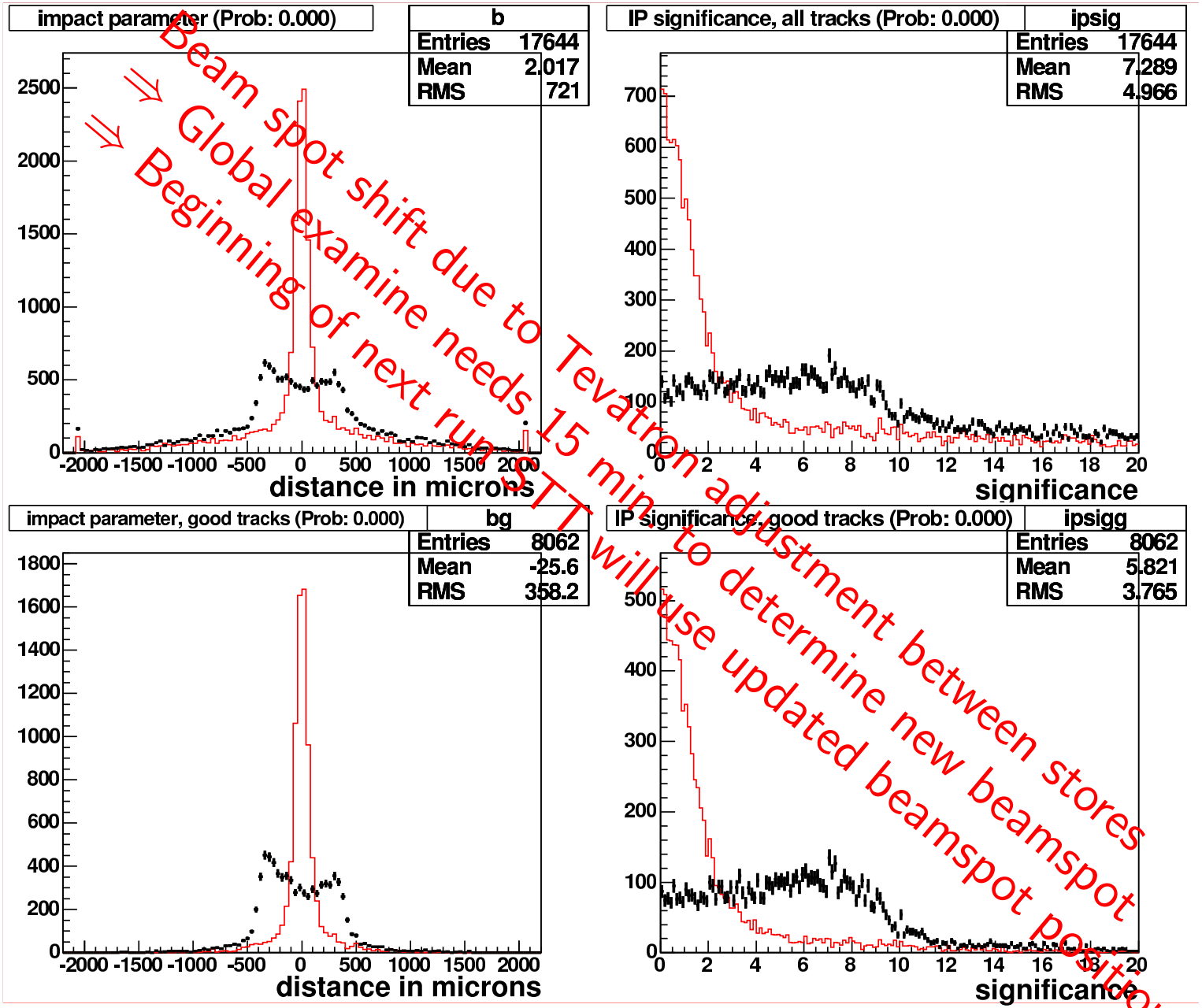

Beam spot shift due to Tevatron adjustment between stores
⇒ Global examine needs 15 min to determine new beamspot
⇒ Beginning of next run STT will use updated beamspot position

FRC parameter and status GUI

File View Help

FRC LTB

Crate Name	Version Check	TRDF Status	SCL Status	PCI1 Status	PCI2 Status	BM0 Status	BM1 Status	BC Status	CTT Errors	L1BX Errors	Turn Errors
70	Normal	Normal	Normal	Normal	Normal	Normal	Normal	Normal	0	0	0
71	Normal	Normal	Normal	Normal	Normal	Normal	Normal	Normal	0	0	0
72	Normal	Normal	Normal	Normal	Normal	Normal	Normal	Normal	0	0	0
73	Normal	Alarm	Normal	Normal	Normal	Normal	Warning	Normal	1894	0	0
74	Normal	Normal	Normal	Normal	Normal	Normal	Normal	Normal	0	0	0
75	Normal	Normal	Normal	Normal	Normal	Normal	Normal	Normal	0	0	0

TRDF OK
RR FIFO OK
BX Match OK
Turn Match OK
BOE OK
EOE OK
CTT Data Missing

Status: GUI intialization complete

Reconnect

To start the STC GUI:
1. setup d0online
2. /online/config/stt/frc &

The multi parameter fields can show the value "Normal" (green), "Warning" (yellow) or "Alarm" (red). Clicking on these fields reveals more detailed parameter settings and in the case of disagreement which parameter(s) differ from the nominal value(s).

The primary purpose of this GUI is to check if parameter settings are consistent with the nominal values.

STC parameter and status GUI

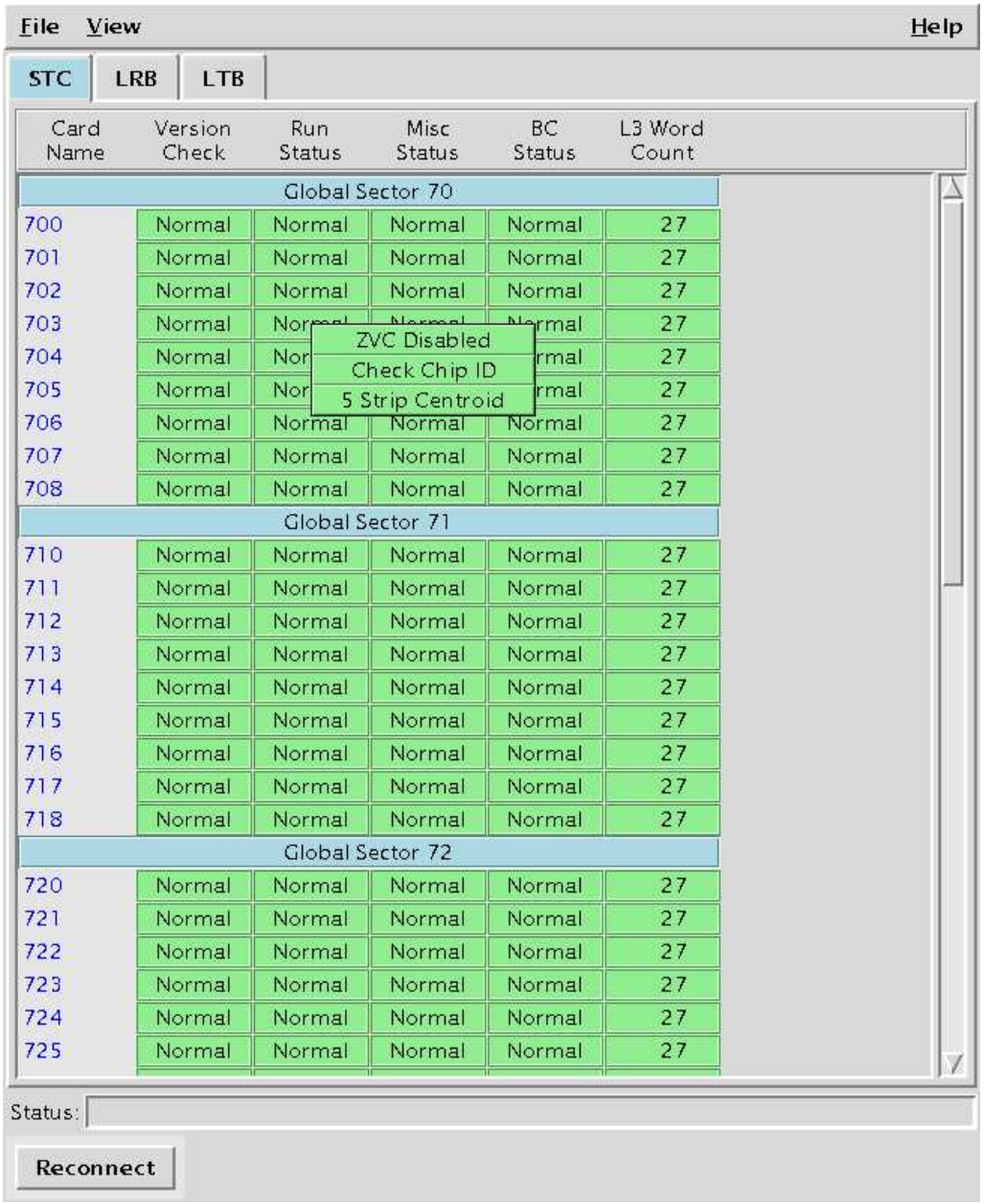

To start the STC GUI:
1. setup d0online
2. /online/config/stt/stc &

The primary purpose of this GUI is to check if parameter settings are consistent with the nominal values.

The multi parameter fields can show the value "Normal" (green), "Warning" (yellow) or "Alarm" (red). Clicking on these fields reveals more detailed parameter settings and in the case of disagreement which parameter(s) differ from the nominal value(s).

TFC parameter and status GUI

To start the STC GUI:
1. setup d0online
2. /online/config/stt/tfc &

File View Help

Track Fit Card | Hotlink Transmitter Board and BC card

Crate Card	Version Check	Config Status	Buffer Status	Operation Mode	Events in INP buffer	Events in L2 buffer	Events in L3 buffer	Events In - Out	Roads In - Out	Roads DSP	Fits DSP	Bad Events Fraction
70 tfc0	Normal	Normal	Normal	Normal	0	0	0	0	0	0	0	0.004
70 tfc1	Normal	Normal	Normal	Normal	0	0	0	0	0	0	0	0.004
71 tfc0	Normal	Normal	Normal	Normal	0	0	0	0	0	0	0	0.000
71 tfc1	Normal	Normal	Normal	Normal	0	0	0	0	0	0	0	0.000
72 tfc0	Normal	Normal	Normal	Normal	0	0	0	0	0	0	0	0.002
72 tfc1	Normal	Normal	Normal	Normal	0	0	0	0	0	0	0	0.000
73 tfc0	Normal	Alarm	Normal	Normal	0	0	1	0	0	0	0	0.000
73 tfc1	Normal	Ala		rmal	0	0	1	0	0	0	0	0.000
74 tfc0	Normal	Nor		rmal	0	0	0	0				
74 tfc1	Normal	Nor		rmal	0	0	0	0				
75 tfc0	Normal	Nor		rmal	0	0	0	0				
75 tfc1	Normal	Nor		rmal	0	0	0	0				

Data type Bad
STC Count Bad
L3 autodrain OFF
SCL enable OFF
Send L1CTT Wrong
Pipeline state ON

Status: GUI intialization complete

Reconnect

The multi parameter fields can show the value "Normal" (green), "Warning" (yellow) or "Alarm" (red). Clicking on these fields reveals more detailed parameter settings and in the case of disagreement which parameter(s) differ from the nominal value(s).

The primary purpose of this GUI is to check if parameter settings are consistent with the nominal values.

- Trouble shooting

What to do if STT crate goes 100% Front End Busy?!

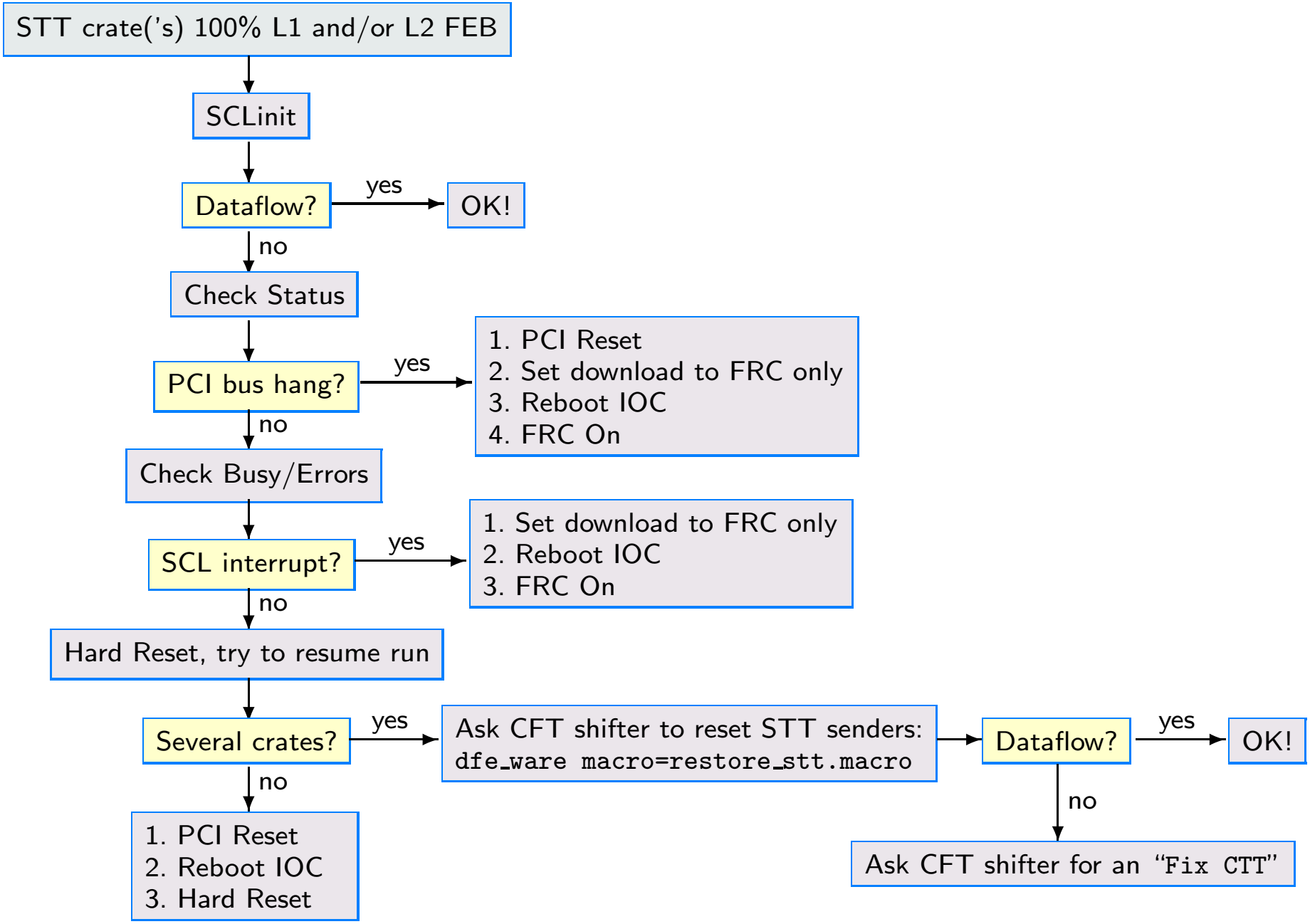

What to do if STT crate is missing events and dataflow stops?!

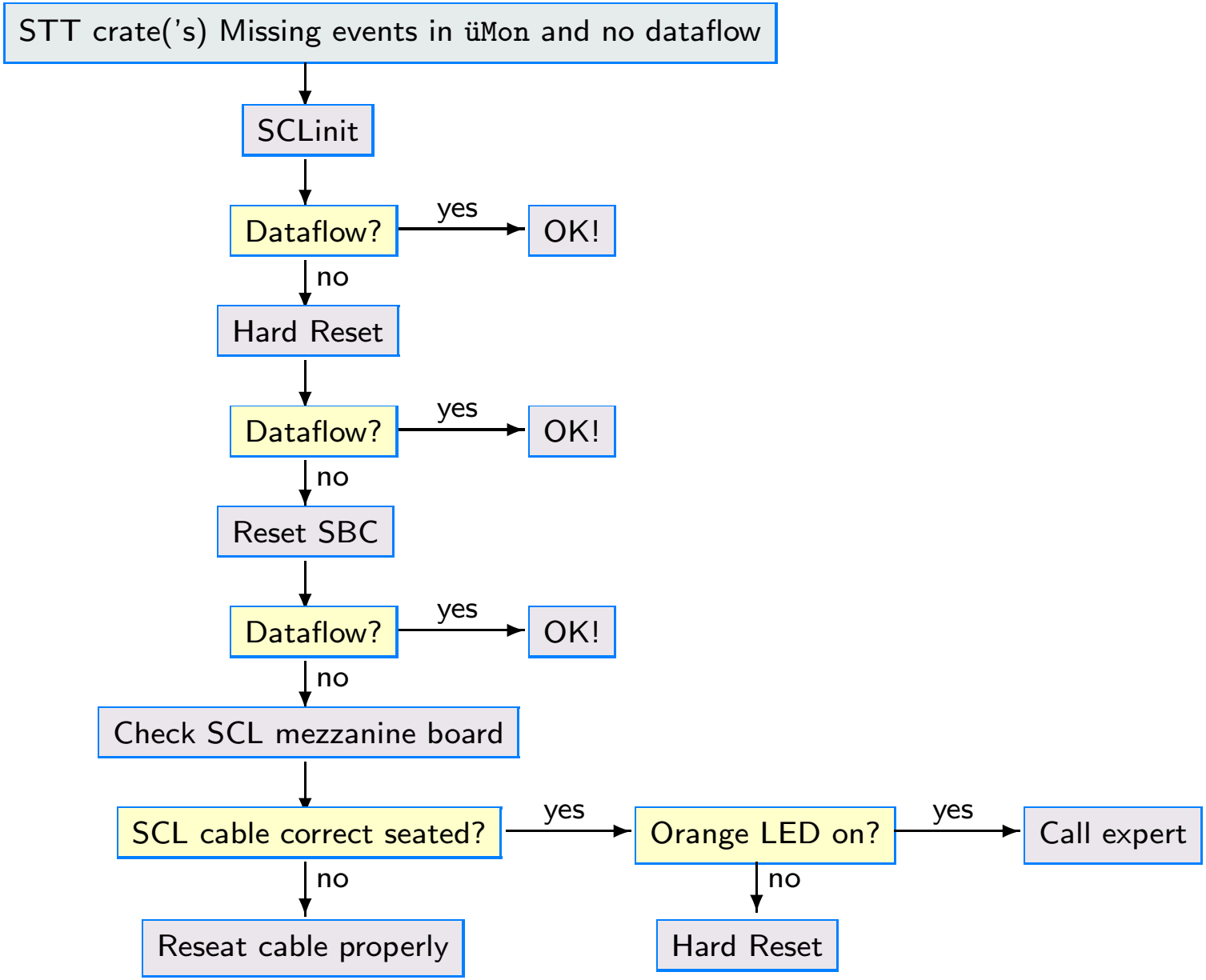

L2 data flow GUI

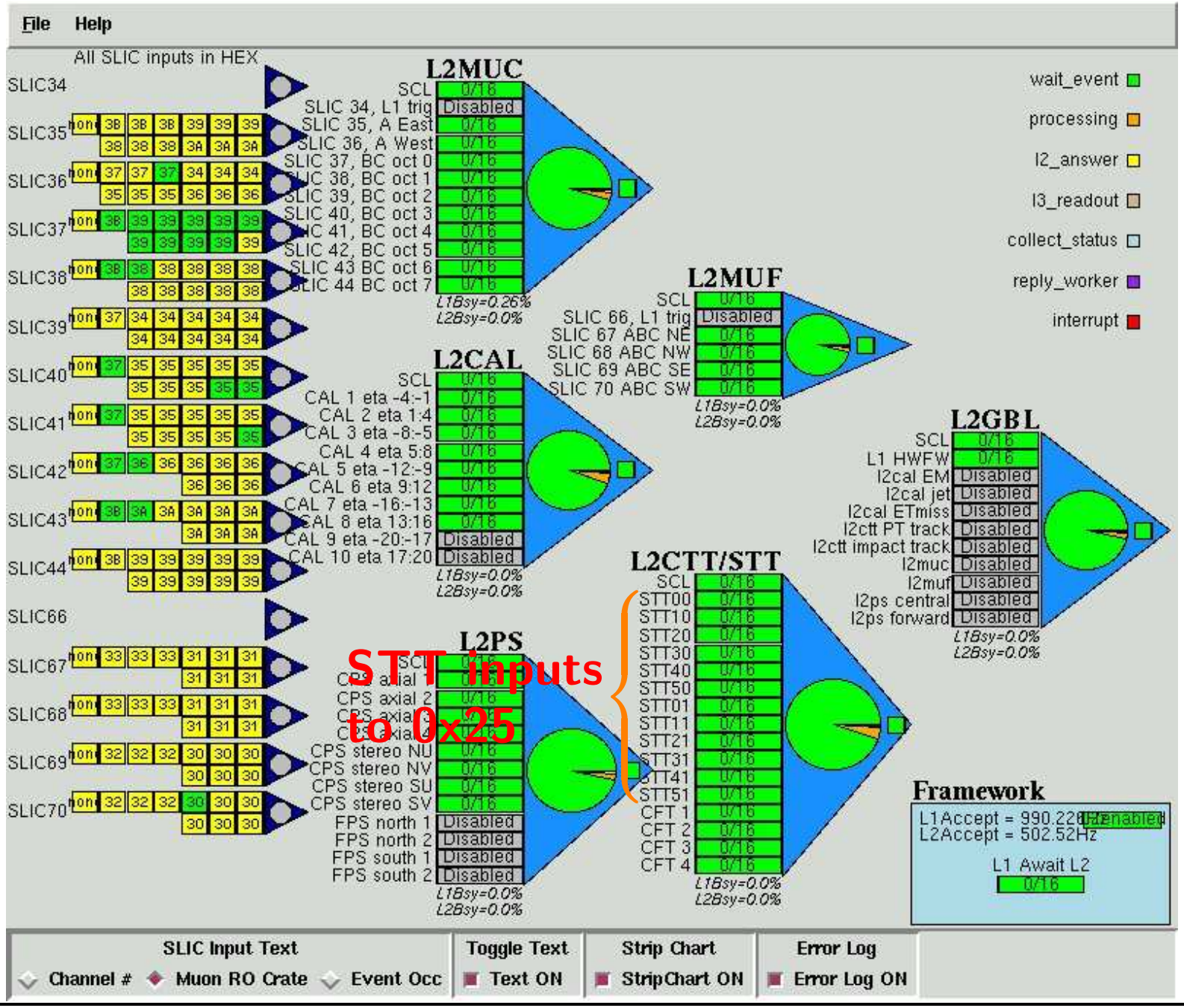

What to do if L2 crate 0x25 claims STT missing events or sync error?!

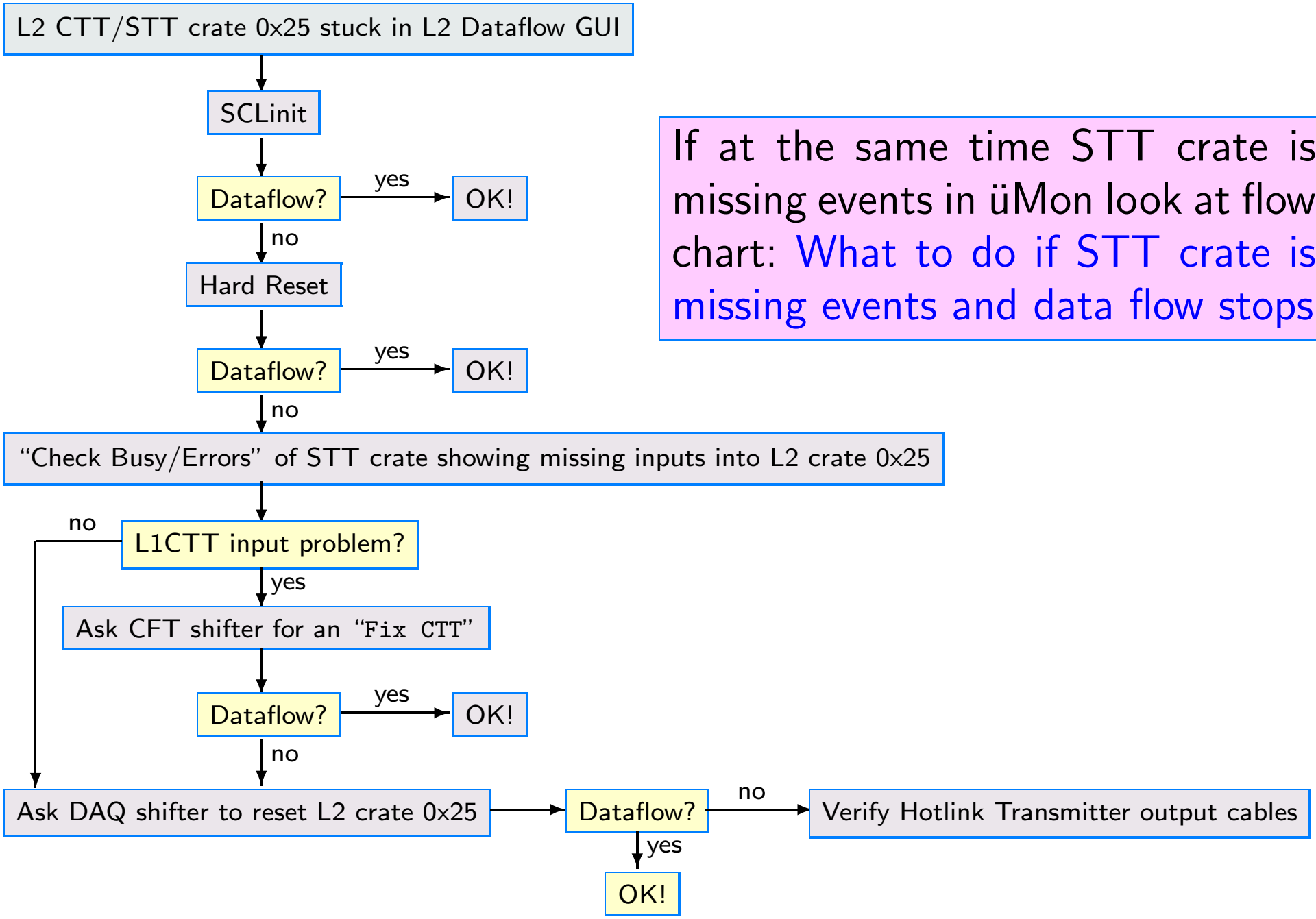

If at the same time STT crate is missing events in üMon look at flow chart: What to do if STT crate is missing events and data flow stops